NPCC

化学吸收法捕集CO_2在中国的发展

Status of Chemical Absorption Technology in China

李 振中
PhD. Zhenzhong LI

国家电站燃烧工程技术研究中心
National Power Plant Combustion Engineering Research Center

- 1. 世界CO_2减排的主要技术
  Summary of CO_2 Control Technology in the World
- 2. CO_2减排方面中国的技术研究情况
  Research of CO_2 Control Technology in China
- 3. 中国化学吸收法CO_2减排研究进展情况
  Research Development of Chemical Absorption in China
- 4. 中国化学吸收法CO_2减排的设想
  Contemplations of Chemical Absorption in China
- 5. 中国化学吸收法CO_2减排结论
  Summary of Chemical CO_2 Control in China

世界CO_2减排的主要技术

Summery of CO_2 control technology in the world

CO_2排放的情况（World CO_2 Emission）

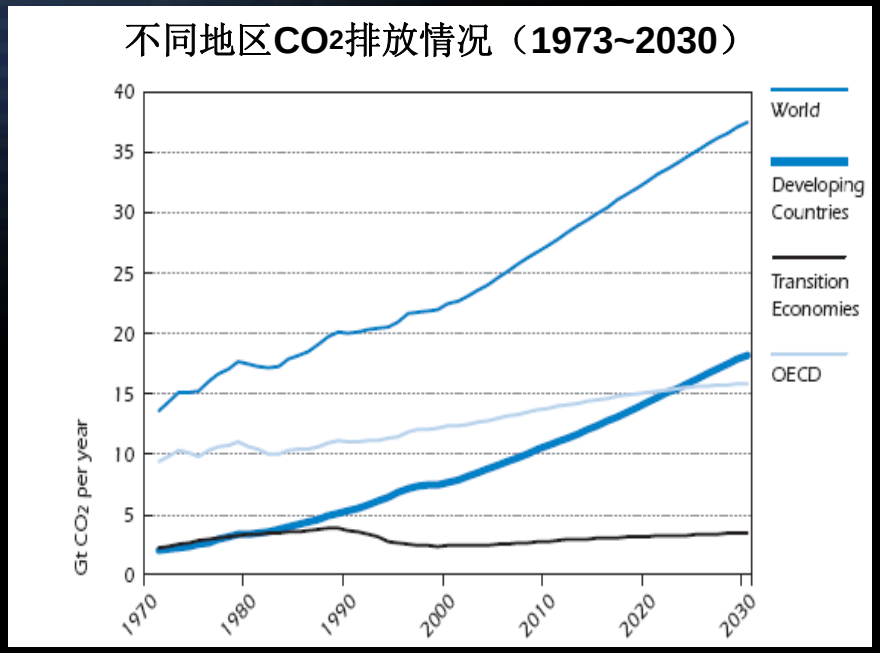

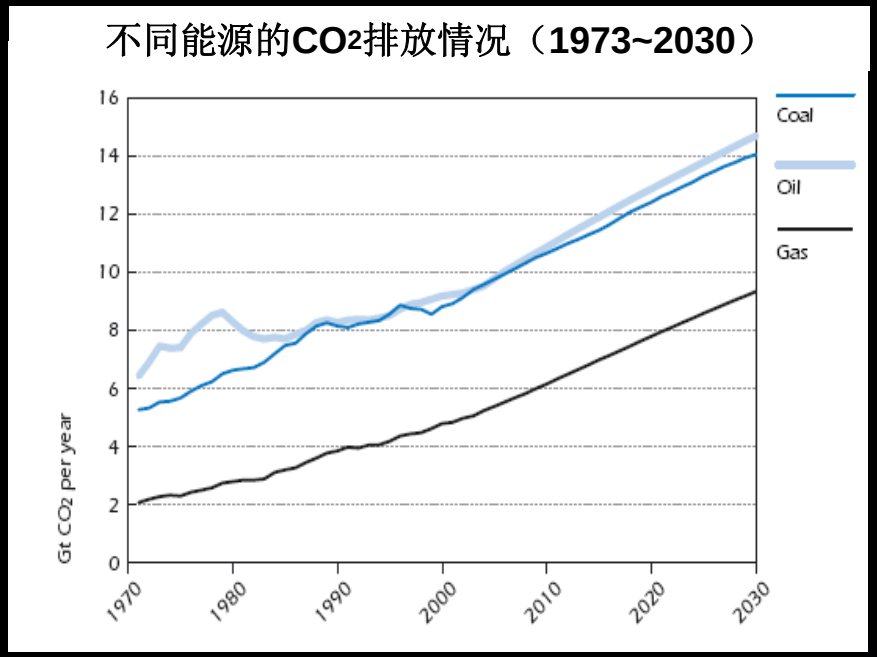

CO_2减排的主要问题（Main Problems in CO_2 Control）

传统能源消费方式下低浓度CO_2的捕集问题
（CO_2 Capture ）

&

捕集的CO_2进一步利用和贮存的问题
（CO_2 Storage）

世界CO_2减排的主要技术

Summery of CO_2 control technology in the world

CO_2减排主流技术
(CO_2 Control Tech.)

化学法捕集燃煤烟气中低浓度CO_2
(Chem. CO_2 Capture)

有H/C转换的整体煤气化联合循环装置
(H/C Shift--IGCC)

富氧循环燃烧技术
(OXY-Fuel Combustion)

世界CO_2减排的主流技术
World CO_2 Control Tech.

减排的CO_2的贮存技术
CO_2 Storage Tech.

- **CO_2的资源化(Used for Resource)**

注入油田或煤矿驱油(EOR)或煤层气

Puts into oilfield (EOR) or coal mine for Gas

- **CO_2的埋藏(Embedding)**

在深海、岩层或地层中的埋藏

Embedding in the deep sea， rock or underground

世界CO_2减排的主要技术

Summery of CO_2 control technology in the world

化学法捕集CO_2: 氨法、胺类（MEA）。

CO_2 Capture by Ammonia & MEA Chemical Absorbent

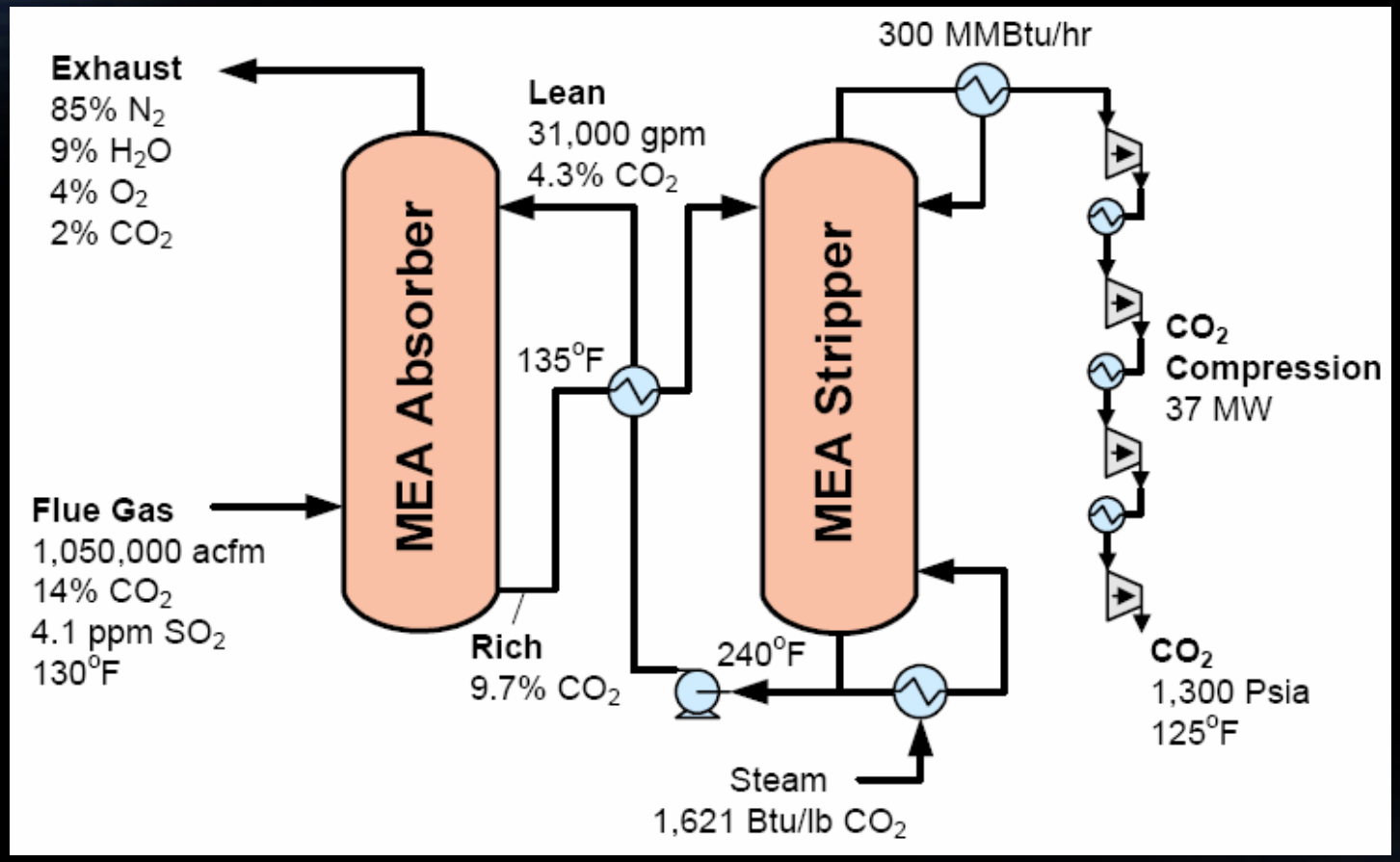

MEA法脱CO_2的流程图 (Amine Capture CO_2 System)

世界CO_2减排的主要技术

Summery of CO_2 control technology in the world

化学法捕集CO_2工艺优缺点

（Excellences & Shortages of Chem. CO_2 Capture）

优　点
（Excellences）

- *成熟工艺，安全可靠；*
  excellent technology，safe and reliable
- *脱除效率高，运行稳定；*
  high effect removal，stable running
- *系统简单，维护方便；*
  simple system， convenient maintenance
- *对原系统改造少，适合现有电站CO_2减排改造。*
  Less change of original system，

缺　点
（Shortages）

- *吸收剂的再生能耗高；*
  high renewable energy of absorbent
- *系统中的设备易腐蚀；*
  easy-corrosion of equipments in the system
- *胺类吸收剂的降解偏高，运行成本偏高。*
  high degradation of absorbent and high cost of running

世界CO_2减排的主要技术

Summery of CO_2 control technology in the world

有H/C转换的整体煤气化联合循环装置（H/C Shift--IGCC）

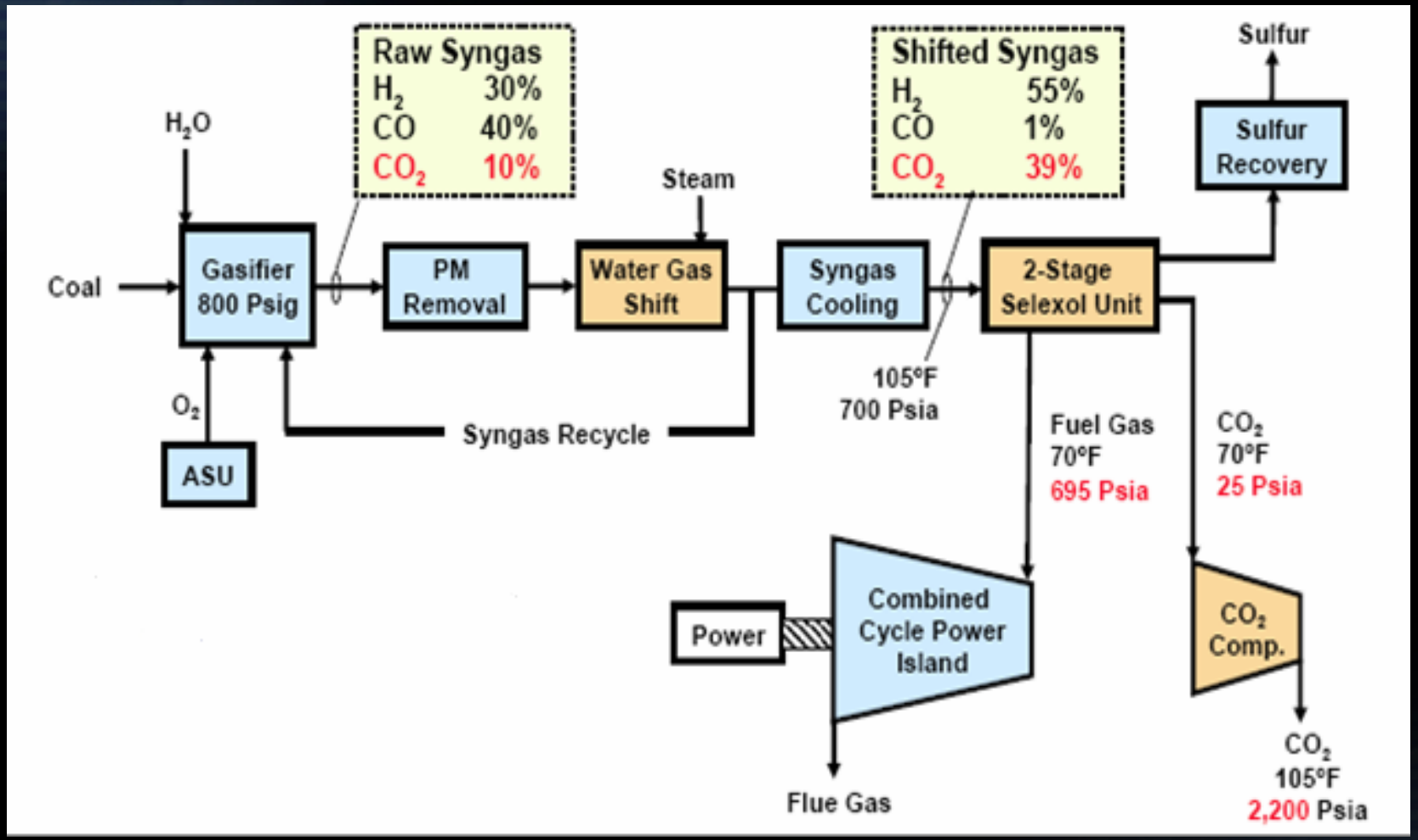

有CO_2捕集的IGCC 电厂的流程图 (IGCC Power Plant with CO_2 Capture)

世界CO_2减排的主要技术

Summery of CO_2 control technology in the world

有H/C转换的IGCC的技术特点 (Characters of H/C Shift--IGCC)

1．燃烧前除去了CO_2，提高了发电的效率；

Remove CO_2 before combustion, improve efficiency of power generation.

2．CO_2的浓度高，利于吸收法或其它分离方法对CO_2 的脱除；

High concentration of CO_2 is good to CO_2 removal by absorption method and other separation method

3．由于硫等污染物的专门工序脱除，使产品的CO_2纯度高；

Special technology removal for S and other pollutant, get high CO_2 content in the production

4．实现了与制氢的多联产工艺路线。

Realization of the hydrogen production process of co-production route

世界CO_2减排的主要技术

Summery of CO_2 control technology in the world

有H/C转换的IGCC工艺的优缺点

（Excellences & Shortages of H/C Shift IGCC）

优　点
（Excellences）

- *实现了多污染物综合治理；*
  removal multi--pollutant
- *提高了CO_2的浓度，利于吸收分离；increase the CO_2 concentration is good to absorption*
- *是制氢与脱除 CO_2 的多联产工艺；*
  Is hydrogen production process of coproduction
- *CO_2综合脱除运行成本低。*
  low cost of CO_2 removal run

缺　点
（Shortages）

- *系统太复杂，技术难度大；*
  simple system, difficult technology
- *产生的 CO_2还要靠化学法等工艺才能除去；*
  CO_2 produced can be removed by chemical method
- *要实现多联产和污染零排放，投资和占地较大*
  More investment and space to realize co-production and zero-pollution

世界CO_2减排的主要技术

Summery of CO_2 control technology in the world

富氧循环燃烧技术(OXY-Fuel Combustion)

富氧燃烧是让碳氢燃料在接近纯氧的条件下燃烧，优点是能得到约 100%的CO_2。

OXY_Fuel combustion let Hydrocarbon fuels burn in the nearly pure O_2, the advantage of which can get nearly 100% CO_2.

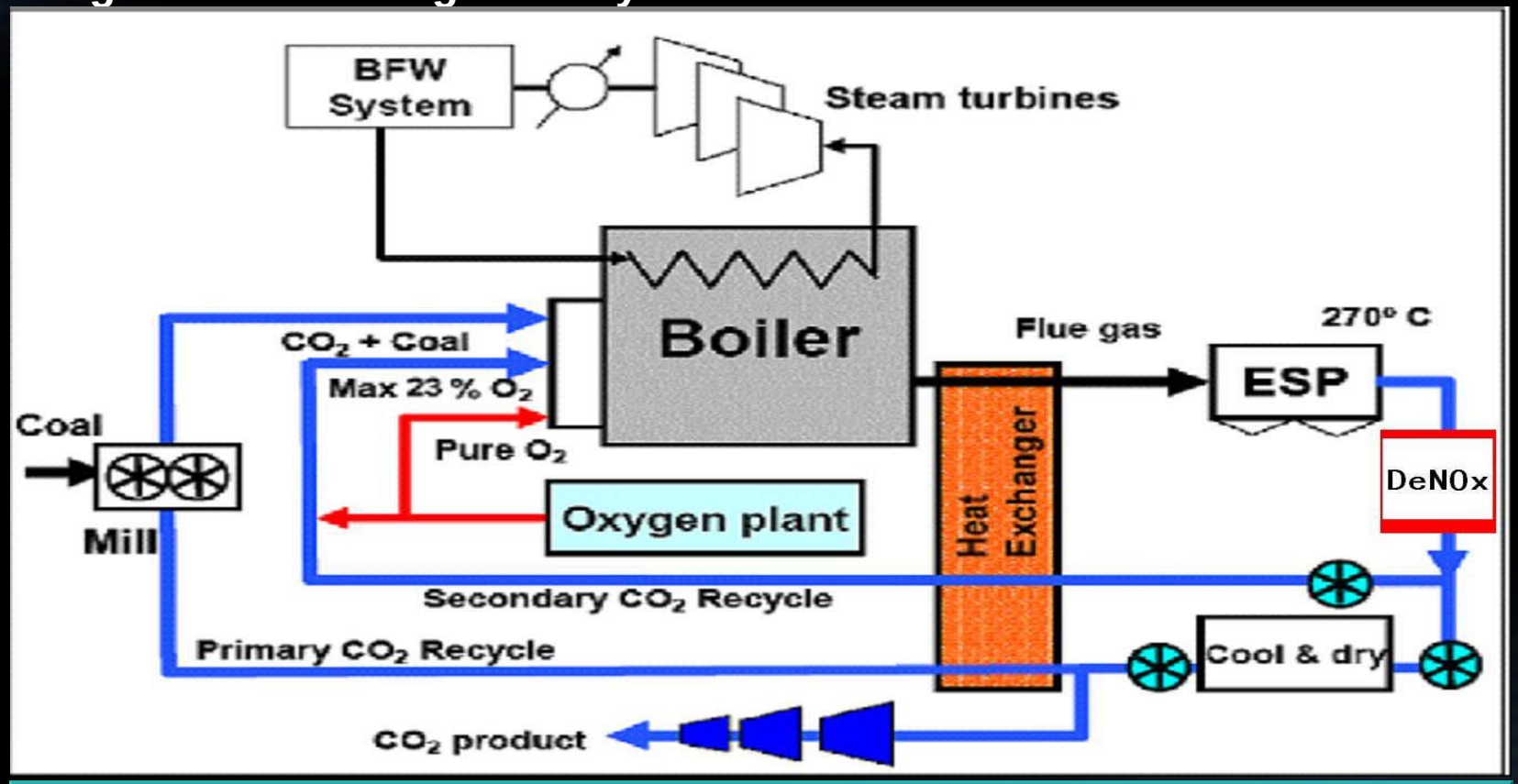

OXY-Fuel 工艺流程图(OXY-Fuel Process Frame)

世界CO_2减排的主要技术

Summery of CO_2 control technology in the world

富氧循环燃烧技术的技术特点

(Advanced of OXY-Fuel Combustion Technology)

- ♥ 燃烧产物中CO2 的浓度达95% 以上, 可以直接分离;
  CO_2 reaches more than 95% in the combustion production can be separated directly

- ♥ SO2 脱除90％以上 , 可省去烟气脱硫设备;
  more than 90% SO2 removal can reduced flu gas Desulfurization facility

- ♥ NOx 的生成量减少（减少25-50％）可不用或少用脱氮设备, 减少费用;
  the production of NOX reduces (25-50%) can saved Denitrification facility, reduce the cost

- ♥ 可直接在现有燃煤锅炉上改造实现，风险性小。
  Improve in the original coal-fired boiler directly, low risk

CO_2减排方面中国的技术研究情况

Research of CO_2 control technology in China

中国在CO_2减排方面的情况

（CO_2 control situation in current China）

能源结构：我国目前每年生产和消费的化石能源约占全球能源总量的10%，相当于排放出全球CO_2总排放量的10% 。中国目前的能源消费结构中煤的比重为62%，油气比重为24% 。我国大气污染物中，85%的CO_2、60%的NO_2来自煤的燃烧。CO_2排放密度比世界平均水平高出26%。

Energy structure: at present, the production and cost of fossil energy in China has been 10% of the total energy all over the world, which equals to 10% emission of the total CO_2 emission all over the world. In the current energy cost structure of China, coal is 62%, oil gas is 24%. In the air pollutant of China, 85%CO_2 and 60% NO_2 comes from the fired coal, the density of CO_2 emission is 26% higher than world average level.

CO_2减排方面中国的技术研究情况

Research of CO_2 control technology in China

面临任务：中国经济快速发展，能源消费和CO_2 排放速度持续增长，需要减排CO_2。

Facing task: high-speed development of China economy, continuously increase of energy cost and CO_2 emission, need to CO_2 control

减排对策：

Method to CO_2 control:

- 节能和提高效率；
  Energy-saving and improve efficiency
- **CO_2捕集利用新技术的开发和推广应用；**
  Development and appliance of new CO_2 capture and utilization technology
- 制定相关的政策法规。
  Making related policy and rule

CO_2减排方面中国的技术研究情况

Research of CO_2 control technology in China

中国在CO_2减排研究方面的情况

（CO_2 control research in current China）

原有技术的研究
Study on Original technology

MEA化学法脱除
MEA chemical method

变压吸附
Pressure-Alter Adsorption

新技术的研究
Study on new technology

氨吸收剂的多污染物脱除
Multi-pollutant removal by ammonia absorbent

IGCC技术
IGCC Tech.

富氧循环燃烧
OXY-Fuel Combustion

CO_2减排方面中国的技术研究情况
Research of CO_2 control technology in China

MEA等吸收剂的化学法脱除CO_2研究情况
（Chemical method capture CO_2 with MEA etc.）

主要是针对原工艺的MEA腐蚀大、易降解、再生能耗高等到缺点进行的研究，加入抗氧化剂、活化剂和缓蚀剂等，一定程度上解决了原工艺的缺陷。已在石油化工领域应用。

Study on shortages of original technology, such as MEA heavy corrosion, easy to degradation, and high renewable energy loss, by adding Antioxidants, activator inhibitor, etc, solve the certain storages of original technology, and it has been used in oil and chemical field.

氨水吸收剂的化学法脱除CO_2研究情况
(Chemical method capture CO_2 with ammonia)

根据中美两国政府关于化石能协议附件IV的规定，由中国NPCC与美国NETL联合研究开发了针对PC炉的烟气氨水吸收CO_2的工艺。

According to the Annex-IV of China-U.S. Fossil Energy Protocol, NPCC and NETL study and develop the technology for CO2 capture in flue gas by spraying aquerous ammonia.

中国化学吸收法CO_2减排研究进展情况

Research Development of Chemical Absorption in China

在中国科技部和美国能源部《关于化石能技术开发和利用领域合作议定书》的框架下，国家电站燃烧工程技术研究中心（**NPCC**）和美国能源部国家能源技术实验室（**NETL**）于**2001**年**8**月**31**日在北京签订了上述**“**议定书**”**附录**IV-A“**能源与环境技术**”**的**“**喷淋氨水减排CO_2和生产长效NH_4HCO_3**”**项目合作协议。

Under the frame of " fossil energy technology development and utilization cooperation protocol” signed by Ministry of Science and Technology of China (MOST) and the U.S. Department of Energy (USDOE), National Power Plant Combustion Engineering Research Center (NPCC) and the U.S. Department of Energy National Energy Technology Laboratory (NE TL) signed Annex-IV-A of the protocol mentioned above on August 31, 2001, Beijing, which including “spraying ammonia emission reduction CO2 and the production of long-lasting NH4HCO3 ” project cooperation protocol of “energy and environment technology”.

中国化学吸收法CO_2减排研究进展情况

Research Development of Chemical Absorption in China

根据协议，**NPCC**完成了真实燃煤烟气中**CO_2**进行喷氨吸收试验的装置的设计和建设。该装置主要设备为单个填料式吸收塔。利用该套实验装置，完成了氨喷淋吸收烟气中**CO_2**、**NO_X**和**SO_X**等污染物的实验研究。

According to the protocol, the design and establishment of true CO2 capture by spraying aquerous ammonia in coal-fired flue gas test facility has completed by NPCC. It adopted mono packing absorption tower as the main facility, completed the test study of CO2, Nox ,SO2 and other pollutant absorption by spraying aquerous ammonia, using this set of test facility.

中国化学吸收法CO_2减排研究进展情况

Research Development of Chemical Absorption in China

单塔工艺的图片
(Single Tower Process Picture)

单塔工艺的流程图
(Single Tower Process Frame)

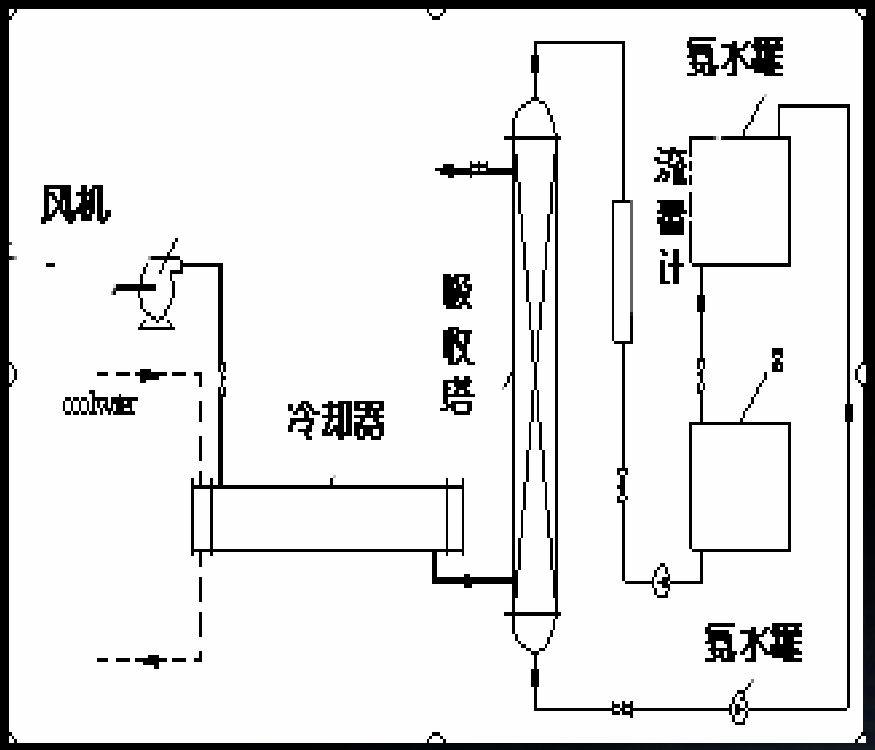

中国化学吸收法CO_2减排研究进展情况

Research Development of Chemical Absorption in China

单塔工艺的研究结论

（Conclusions of Single Tower Process）

氨水可吸收燃煤烟气中CO_2， SO_2及NO_x，达到减排污染物的目的；

CO_2, SO_2 and NO_x in coal-fired flue gas can be absorbed by aquerous Ammonia, in order to reduce the pollution

吸收产物在溶液中形成NH_4HCO_3， （NH_4）$_2SO_4$及NH_4NO_3三种物质的混合物，可视为一种复合化肥；

The absorption production can turned to the mixture of NH_4HCO_3, （NH_4）$_2SO_4$ and NH_4NO_3 in the solution, which can be regarded as Compound Fertilizer

氨水浓度及摩尔比对吸收率影响大，浓度为10%、15%和20%的氨水的吸收效率分别为55%、78%和93%。

The concentration of aquerous ammonia and molar has big influence on Absorption rate, concentration 10% aquerous ammonia to 55% absorption rate, And 15% concentration to 78% absorption, 20% concentration to 93% absorption

中国化学吸收法CO_2减排研究进展情况

Research Development of Chemical Absorption in China

NETL在实验室内以配气方式，模拟电站锅炉烟气中**CO_2**的含量（**12%～14%**），在小型填充床内进入烟气中的**CO_2**被一定浓度的氨水吸收，形成复合铵盐。**NETL**还用小型设备进行**CO_2**的再生工艺实验。

NETL use mixed air in lab to simulate the flue gas of boiler in the power plant,with CO_2 content (12%-14%), CO_2 in the flue gas is absorbed by aquerous ammonia with certain concentration in small sized packing facility, and turned to be Ammonium Compound. NETL also use small sized equipment to run CO_2 renewable technology test.

中国化学吸收法CO_2减排研究进展情况

Research Development of Chemical Absorption in China

NETL用15%CO_2和85%N_2的常温常压气体混合物模拟烟气来观察氨水吸收CO_2的效果。结果表明：用浓度28%的氨水喷淋时，约97% 的CO_2被吸收；当氨水的浓度降为10%时，CO_2被吸收的效率降低到70%。NETL还对吸收反应的机理进行了研究。

15% CO2 and 85% N2 is used to simulated flue gas to observe the effect of CO2 capture by aquerous ammonia. It is shown that 97% CO2 can be absorbed in aquerous ammonia with 28% concentration; the CO2 absorption rate reduced to 70% with the concentration of aqueroua ammonia reduces to 10%. The absorption reaction principle is also studied by NETL.

中国化学吸收法CO_2减排研究进展情况

Research Development of Chemical Absorption in China

2004年4月，中国科技部与美国能源部能源实验室签定了附件IV《CO_2捕集和减排的研发工作协议》，协议提出在沈阳建立长期的合作机构“中美燃煤CO_2减排及污染物控制联合实验室”；燃烧中心负责建设三塔中试试验台，NETL负责提供CO_2再生装置，组成完整的CO_2减排试验平台，共同从事CO_2减排研究，以及燃煤电站烟气多种污染物一体化脱除研究与开发。

In April of 2004 Washington of U.S., Annex-IV of Research on CO_2 capture and control Protocol was signed by Ministry of Science and Technology of China (MOST) and U.S. Department of Energy (U.S. DOE), which suggests to establish a long-term cooperation institute, China-U.S. “coal-fired CO_2 and multi-pollutant control unite Laboratory” ; NPCC is responsible for establishing tri-tower, NETL provides CO_2 regeneration facility, and build up integrate CO_2 control test platform, and cooperate on the study of CO_2 control, and study and development of the integral technology on multi-pollutant removal of coal-fired power plant.

中国化学吸收法CO_2减排研究进展情况

Research Development of Chemical Absorption in China

NPCC完成的工作:

(Completed Works in NPCC)

- 三塔吸收燃煤烟气CO_2 试验台的设计和建设;

  Design and establishment of CO_2 capture from flue gas by tri-tower test platform
- 三塔吸收燃煤烟气CO_2 的试验研究工作;

  Study on CO2 capture from coal-fired flue gas by tri-tower test
- 燃煤烟气多污染物一体化脱除的研究工作;

  Study on integration technology on multi-pollutant removal from flue gas
- 煤电站烟气中CO_2捕集的工程化工作;

  Project of CO2 capture from flue gas in coal-fired power plant
- 在NPCC成立了“辽宁省燃煤CO_2减排及污染物综合控制开放重点实验室”

  Established “Liaoning coal-fired CO_2 and pollutant control key laboratory” in NPCC

中国化学吸收法CO_2减排研究进展情况

Research Development of Chemical Absorption in China

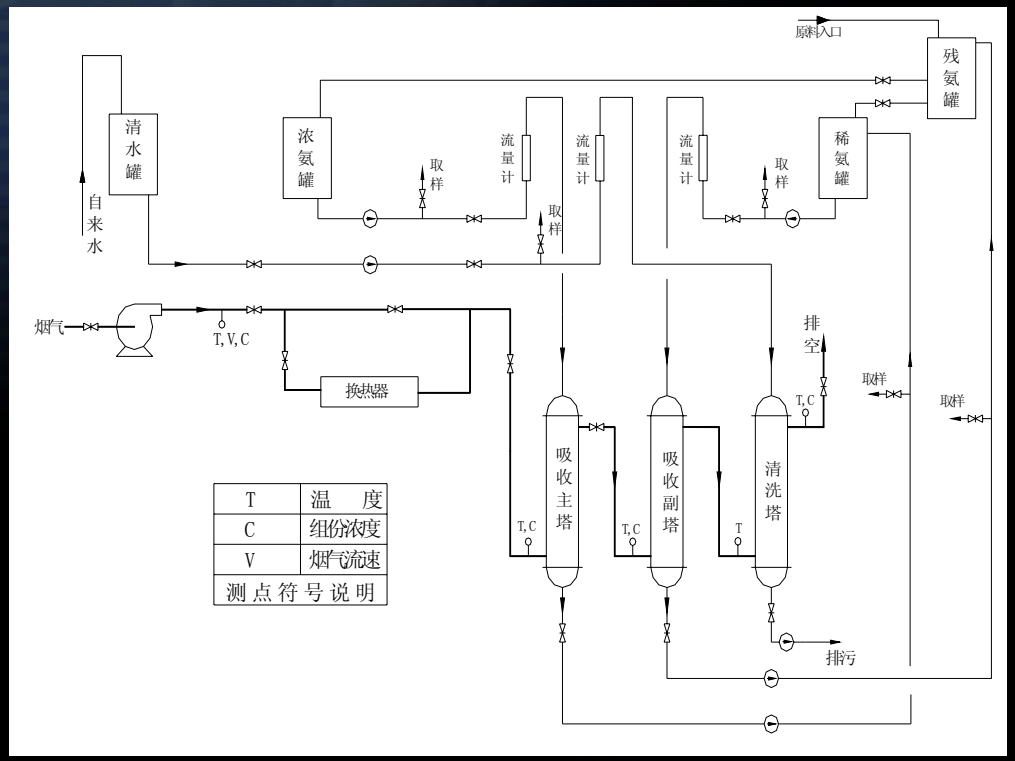

三塔CO_2捕集试验装置流程图
（Tri-Tower CO_2 Capture Facility Frame）

三塔CO_2捕集试验装置图片
（Tri-Tower Facility Picture）

中国化学吸收法CO_2减排研究进展情况

Research Development of Chemical Absorption in China

燃煤烟气CO_2脱除试验台的基本参数

（basic parameters of caol-fired flue gas CO_2 capture test platform）

燃煤量(coal consumed, kg/h)	10~30
烟气流量(flow of flue gas, m^3/h)	50~200
除尘效率(efficiency of dedust, %)	≥99
氨加入量(aquerous ammonia added, kg/h，20%)	50~400
反应温度(reaction temperature, ℃)	20~40

中国化学吸收法CO_2减排研究进展情况

Research Development of Chemical Absorption in China

三塔吸收CO_2试验研究结果与分析

The test results and analysis of CO2 capture by tri-tower

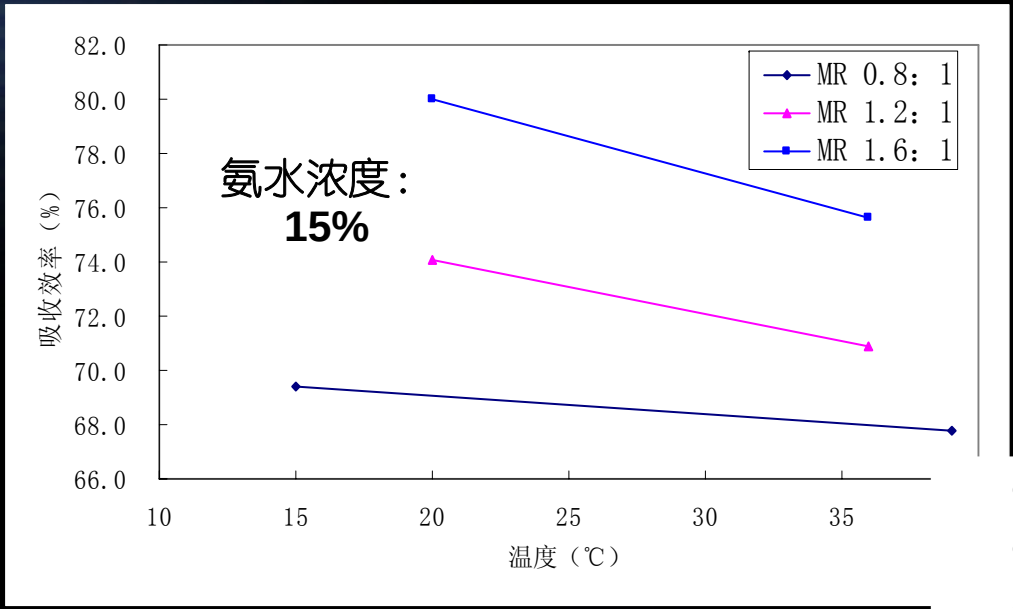

温度的影响
Temperature

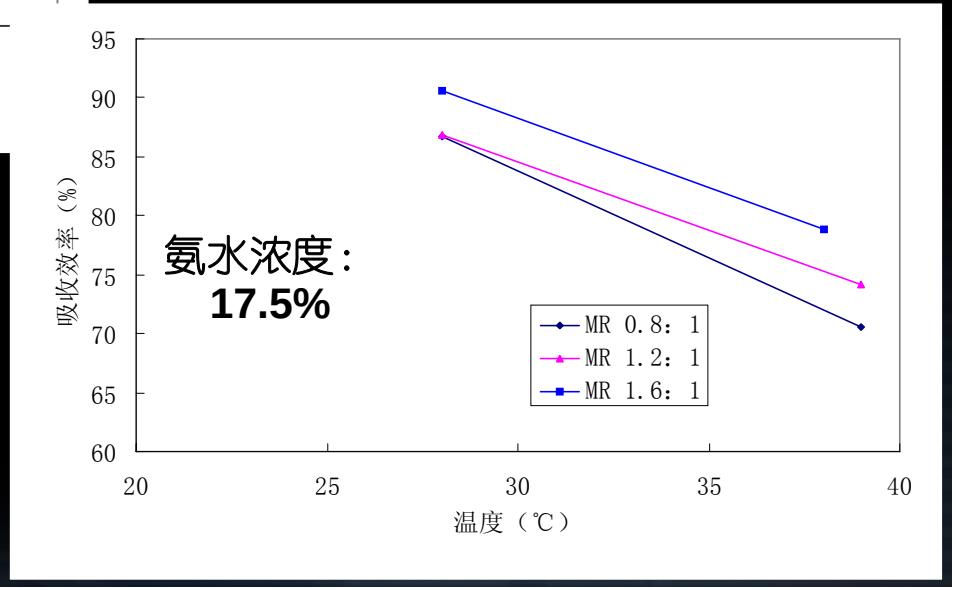

低温利于氨水吸收燃煤烟气中CO_2，温度对高浓度氨水的吸收影响大。

Low temperature is good to CO2 Capture by aquerous ammonia in Coal-fired flue gas, temperature Influences much on absorption of high concentration aquerous ammonia.

中国化学吸收法CO_2减排研究进展情况

Research Development of Chemical Absorption in China

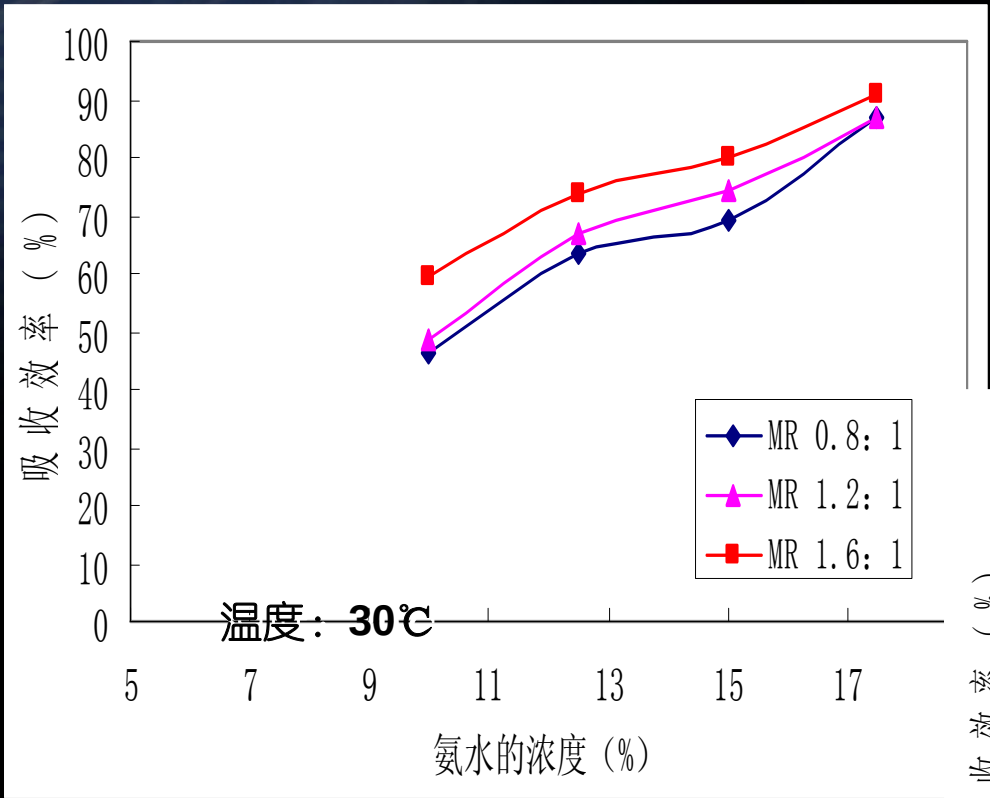

氨水浓度的影响

Absorbent Concentration

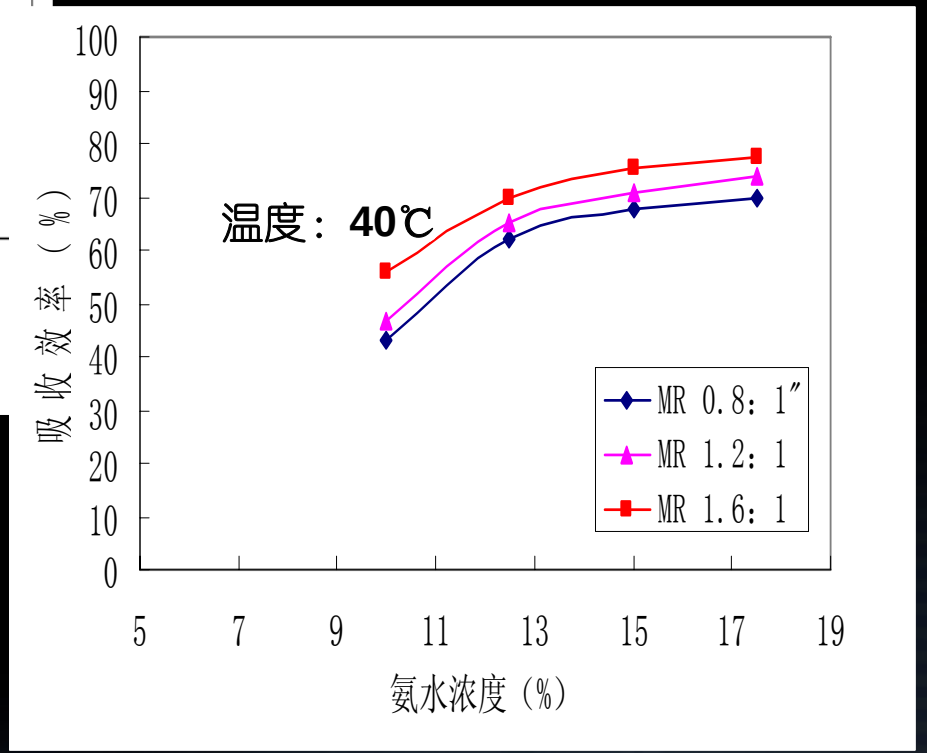

是氨水吸收CO_2最重要影响因素，高浓度氨水的吸收效果好。

Concentration is the most important factor in absorption test, high concentration is good to CO_2 capture.

中国化学吸收法CO_2减排研究进展情况

Research Development of Chemical Absorption in China

三塔氨水吸收CO_2的试验研究结论：
Conclusion of Tri-Tower process for CO_2 Capture

1. 温度低利于对CO_2的脱除，30℃比40℃时的吸收效率高3%~11%；
   Low temperature is good to CO_2 removal, the absorption rate is 3%-11% higher on 30℃ than on 40℃
2. 高浓度氨水吸收的效果好，17.5%的吸收率可达91%；
   Better absorption in high concentration of aquerous ammonia, the absorption rate can reach 91% in the concentration of 17.5%
3. 与单塔系统相比，脱除的效率提高2%~5%，
   The removal rate increased 2%-5%, compared with mono-tower
4. 消除了废气中氨的逃逸问题，出口烟气中漏失氨不高于5ppm。
   Solve the problem of ammonia slip in emmisions, the ammonia slip can be controlled below 5 ppm.

中国化学吸收法CO_2减排研究进展情况

Research Development of Chemical Absorption in China

燃煤烟气多污染物一体化脱除研究

(integration technology on multi-pollutant removal from coal-fired flue gas)

通过对氨水法吸收CO_2与MEA工艺进行比较，NPCC与NETL得出以下结论：

Compared with the technology of CO_2 capture by aquerous ammonia and MEA, conclusion is shown as following:

- 氨水工艺的吸收能力增加两倍或更多；
  the absorption ability increases twice or more of aquerous ammonia technology
- 解吸和吸收剂的再生能源消耗减少了49%～64%；
  renewable energy loss of Absorbent and desorption reduce 49%~64%
- 吸收剂的补充成本仅为MEA工艺的1/6 ；
  The added cost of absorbent only reaches 1/6 of MEA technology
- 脱除CO_2的工艺能与脱除其它污染物的工艺进行集成，节约投资和建设的费用和空间。
  CO2 removal technology can be integrated with other pollutant removal technology, saving cost and space investment and establishment.

中国化学吸收法CO_2减排研究进展情况

Research Development of Chemical Absorption in China

燃煤烟气多污染物一体化脱除研究

Research on integration technology on multi-pollutant removal from flue gas

NETL提出了多种燃煤烟气污染物的综合治理方案。

Reduction program of multi-pollutant from coal-fired flue gas has provided by NETL

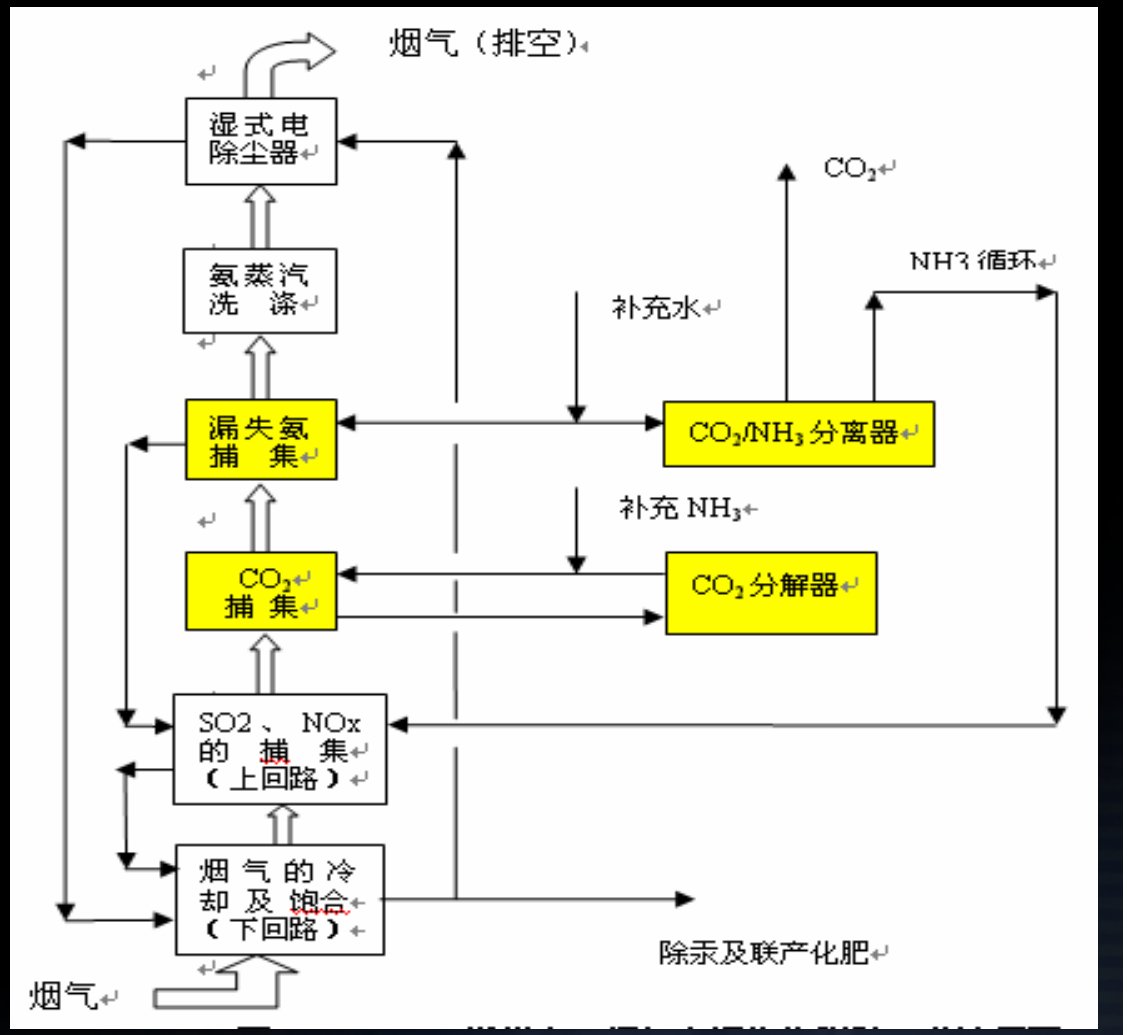

多污染物一体化脱除工艺框图

(Integrated Multi-Pollution Capture Frame)

中国化学吸收法CO_2减排研究进展情况

Research Development of Chemical Absorption in China

燃煤电站烟气中CO_2捕集的工程化工作

NPCC利用与美国NETL对CO_2捕集的研究成果，以CO_2驱油为应用目的，与有关部门合作编写了100MW级的《燃煤电站烟气二氧化碳分离与驱油利用技术初步可行性研究报告》。得出了以下的结论：

Base on the result of CO2 capture test with U.S. NETL, aimed to CO2 EOR application, NPCC wrote “Study report of CO2 separation and EOR of flue gas in the coal-fired power plant.” the conclusion shows as following:

100MW级燃煤电站烟气CO_2减排与污染物一体化控制技术的工程改造，预计工程投资额为7500万元，工程总造价预计为8350万元，单位造价835元/ KW。回收的二氧化碳价格680元/吨、硫 酸铵700元/吨、硝酸铵1600元/吨，初步估算，电厂可以盈利运 行。

Project improvement of CO2 control and integration technology on multi-pollutant removal from flue gas in 100MW coal-fired power plant, the budget of project investment cost is 75,000,000 Yuan, the total project cost is 83,500,000 Yuan, unit cost is 835 Yuan per ton. The price of recycled CO2 is 680 Yuan per ton, Sulfur ammonium is 700 Yuan per ton, NH_4NO_3 is 1600 Yuan per ton, based on the budget above, power plant can run with profit.

中国化学吸收法CO_2减排研究进展情况

Research Development of Chemical Absorption in China

NPCC与挪威方面的合作

Cooperated between NPCC and Norway Silica Tech ANS (ST)

以CO_2的捕集的工程应用研究为目的，在挪威政府与NETL的安排之下，挪威Silica Tech ANS (ST) 公司与NPCC于2006年签订了燃烧天然气烟气CO_2捕集的研究合同。NPCC负责了全部试验研究工作, 挪威Silica Tech ANS (ST)公司负责工程应用。

To research on CO2capture and control, China National Power Plant Combustion Engineering Research Center (NPCC) and Norway Silica Tech ANS (ST) signed a purchase order for running CO2 capture tests in 2006 under the arrangement of Norway government and NETL. Project application was responsible by Silica Tech ANS (ST), and all of test work was responsible by NPCC.

中国化学吸收法CO_2减排研究进展情况

Research Development of Chemical Absorption in China

条　件：

Test Condition:

- 燃用天然气，CO_2浓度:3～4%（燃煤CO_2浓度12~14%）；

  Flue gas contains 3-4% CO2 by weight (coal-fired CO2 concentration 12-14%)

- 烟气温度:30°C；

  Flue gas temperature: 30 °C

- 氨水作为吸收剂，浓度：17.5 % w/w；

  Aqueous Ammonia as absorbent, its concentration: 17.5 % w/w

- 摩尔比（NH_3/CO_2）： 2；

  $NH_3/CO_2=2$

- 三塔工艺系统。

  Tri-tower technology system.

中国化学吸收法CO_2减排研究进展情况

Research Development of Chemical Absorption in China

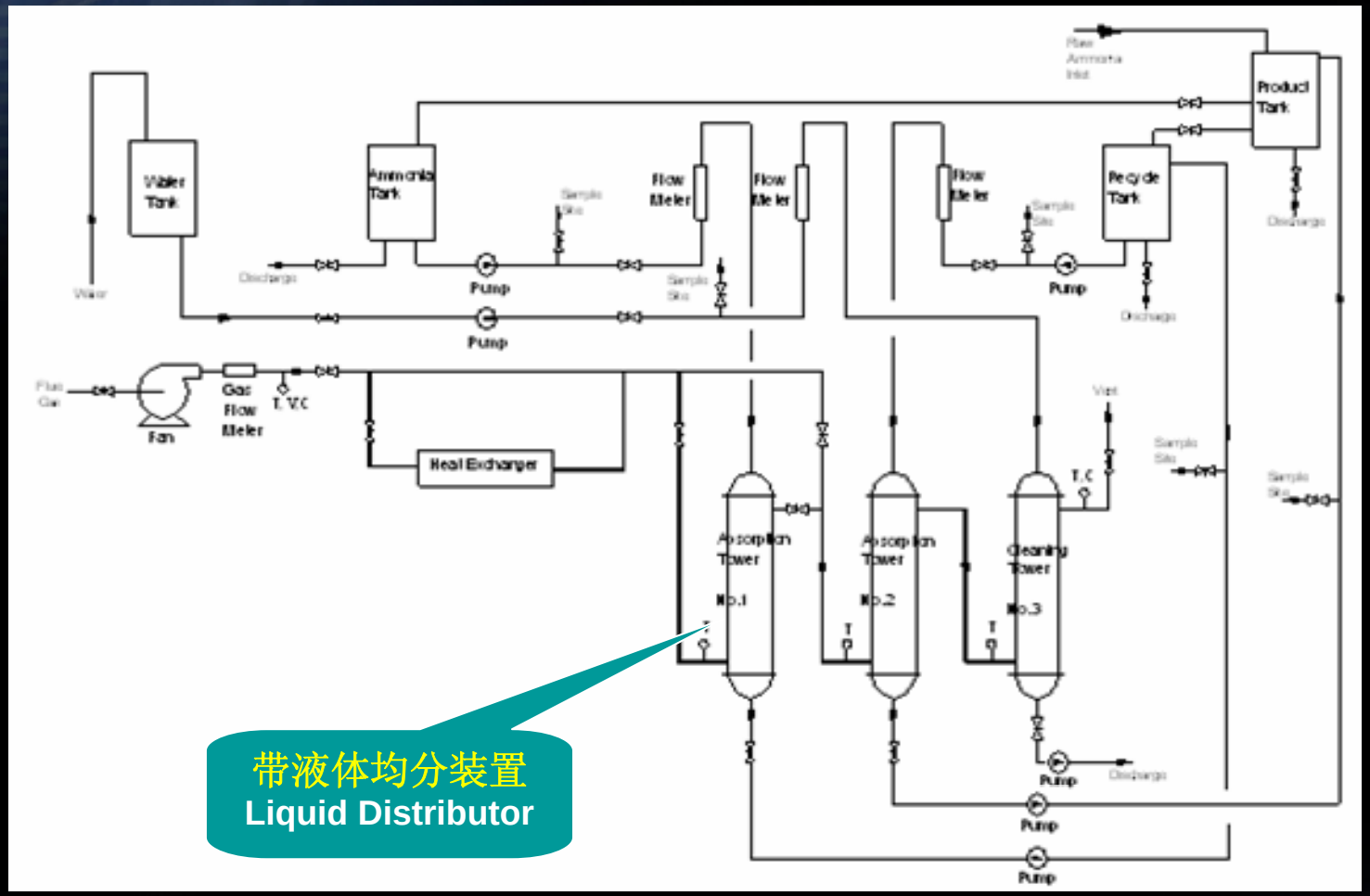

挪威烟气低浓度CO_2脱除工艺框图

(**CO_2 Capture Frame for Low Concentration in Flue Gas**)

中国化学吸收法CO_2减排研究进展情况

Research Development of Chemical Absorption in China

实验结果
Test Results

CO_2的吸收效率：75~80%

CO_2 absorption rate: 75-80%

pH值：10.4

pH Value : 10.4

各种离子浓度：NH4+ 5.5(mol/l)
CO32- 1.9(mol/l)
HCO3- 1.7(mol/l)

concentration of ions:NH4+ 5.5(mol/l)
CO32- 1.9(mol/l)
HCO3- 1.7(mol/l)

烟气中的氨：5ppm

ammonia in flue gas: 5ppm

中国化学吸收法CO_2减排研究进展情况

Research Development of Chemical Absorption in China

研究结论

Conclusion

- 氨水是捕集烟气中CO_2的很好的吸收剂，烟气中CO_2浓度为3～4%时，用17.5%的氨水进行吸收，氨/碳摩尔比为2，温度在30°C时,CO_2的吸收效率为75～80%；

  Aqueous ammonia is a kind of fitting absorbent for CO_2 capture in flue gas. High concentration aqueous ammonia could conduct better CO_2 capture efficiency; At 30 ℃, CO_2 removal efficiency is 75 ~ 80% with CO_2 concentration of 3 ~ 4% in flue gas and aqueous ammonia concentration of 17.5%.

- 生成产物是碳酸铵和碳酸氢铵的混合物，吸收液的PH 值约为10.4;

  product solution is a mixture. And pH is about 10.4.

- 反应器设计采用了喷淋、填料、液体分布器，提高吸收效率；

  The design of reaction equipment contains spraying, packing and liquid distributor , in order to enhance absorption rate.

- 三塔工艺系统，增加了除雾装置，即提高了吸收效率,又降低了氨逃逸。

  Tri-tower technology system, added mist removal facility in NO.3 tower, in order to enhance the absorption rate, also reduce the ammonia slip.

中国化学吸收法CO_2减排的设想

Contemplations of Chemical Absorption in China

- 完成氨水法三塔脱除CO_2的工程技术研究开发；
  Complete the study and development of CO2 removal by tri-tower using aquerous ammonia.
- 在中美框架协议附件IV的基础上，继续与美方的研究合作；
  Based on the Annex-IV of China-U.S. frame protocol, continue to cooperate with U.S. side.
- 建立100MW级的利用CO_2进行驱油和驱煤层气
  Establishing 100MW level demo-facility to EOR by CO_2.

中国化学吸收法CO_2减排的设想

Contemplations of Chemical Absorption in China

- 建立燃煤电站烟气CO_2捕集、封存和利用的示范工程装置；
  Establishing demo-facility of CO2 capture, storage and use in coal-fired power plant.
- IGCC装置的化学吸收法CO_2分离的系统技术的研究开发；
  Study and development of chemical absorption method for CO_2 separation systematic technology by IGCC facility
- IGCC装置的化学吸收法CO_2分离的系统的示范工程。
  Demo-project of chemical absorption method for CO_2 separation system.

中国化学吸收法CO_2减排结论

Summery of chemical CO_2 control in China

- 我国的化学吸收法CO_2减排技术的研究要与国际上的技术发展保持同步进行，在国际CO_2减排合作机制内扩大与先进研究机构的交流与合作；

  The study of CO_2 control by chemical method in China needs to keep pace with the international technology development, further communication and cooperation with advanced institutions based on the current CO_2 cooperation system.

- 加强国际间的合作，特别加强与美欧间的合作，重点利用好中国科技部与美国能源部签订的化石能合作的政府间协议；

  Further international communication, especial with U.S. and European countries, making full use of China-U.S. Fossil Energy Cooperation Protocol signed by Ministry of Science and Technology of China (MOST) and U.S. Department of Energy (USDOE).

中国化学吸收法CO_2减排结论

Summery of chemical CO_2 control in China

- 我国在化学法吸收CO_2方面已取得了一定的成果，并开发了系统的技术；

  China has got some results in CO_2 absorption by chemical method.

- 尽快建立以利用CO_2为目的的示范工程，在取得一定经验后，再逐步推进CO_2的捕集和贮存研究的示范工程；

  Establishing ASAP demo-project aimed to use CO_2, and then improve demo-project of study on CO_2 capture and storage step by step, after got some experience.

- 加强IGCC中CO_2的分离技术的研究及多污染物一体化脱除技术的研究和应用。

  Strengthen the study of CO_2 Separation technology & study and application of the integration technology on multi-pollutant removal.

谢 谢

THANK YOU