Protecting Stocks of Weapons-Usable Material Worldwide Against Global Terrorist Threats

Matthew Bunn
Project on Managing the Atom, Harvard University
Evgeniy P. Maslin
Former commander, 12th Main Directorate,
Russian Ministry of Defense

Workshop on "Protecting Nuclear Programmes From Terrorism,"
Vienna, November 19-20 2009
World Institute of Nuclear Security and
American Academy of Arts and Sciences

Terrorists are seeking nuclear weapons…

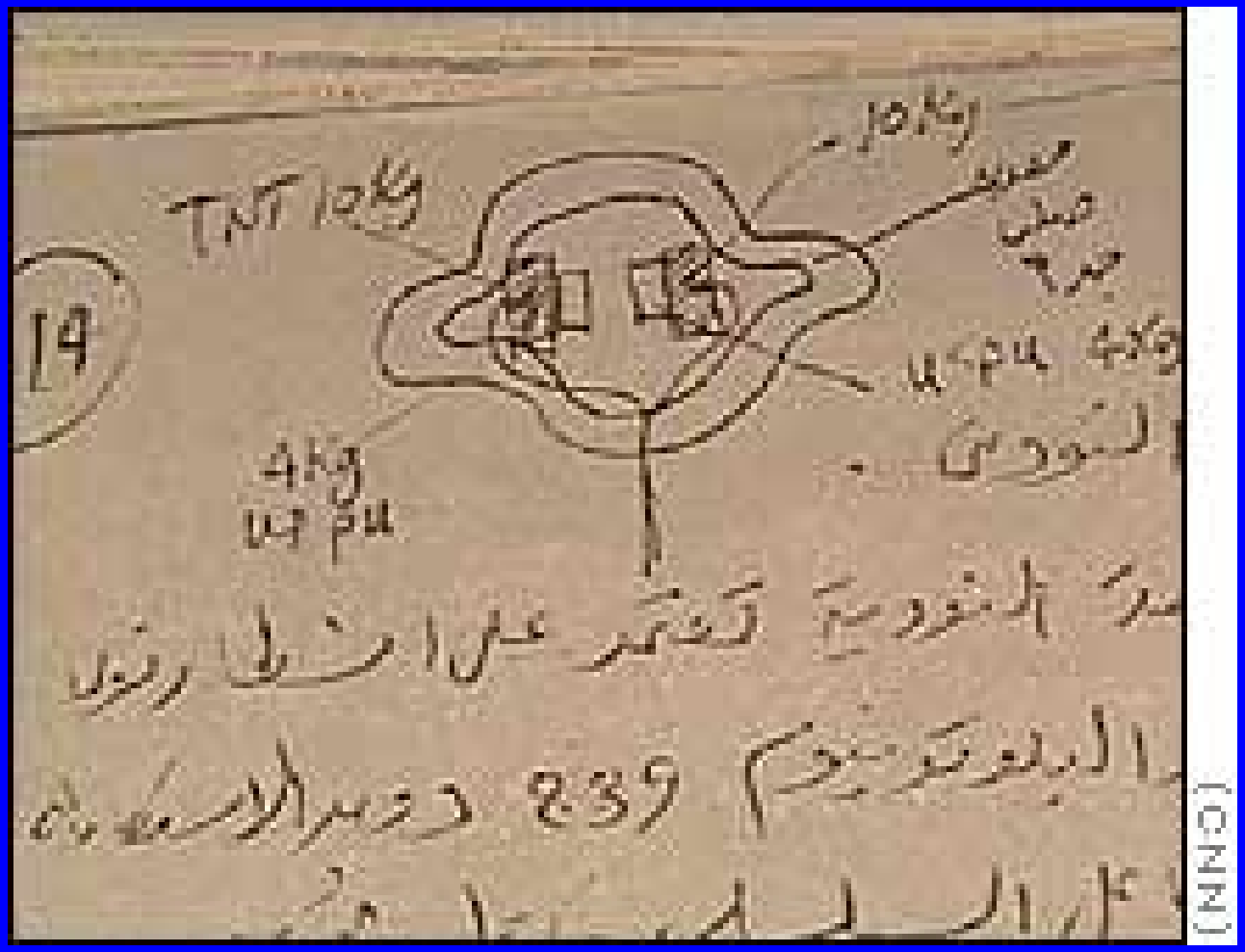

Source: CNN

With nuclear material, terrorists may be able to make crude nuclear bombs

- With HEU, gun-type bomb – as obliterated Hiroshima – very plausibly within capabilities of sophisticated terrorist group
- Implosion bomb (required for Pu) more difficult, still conceivable (especially if they got help)

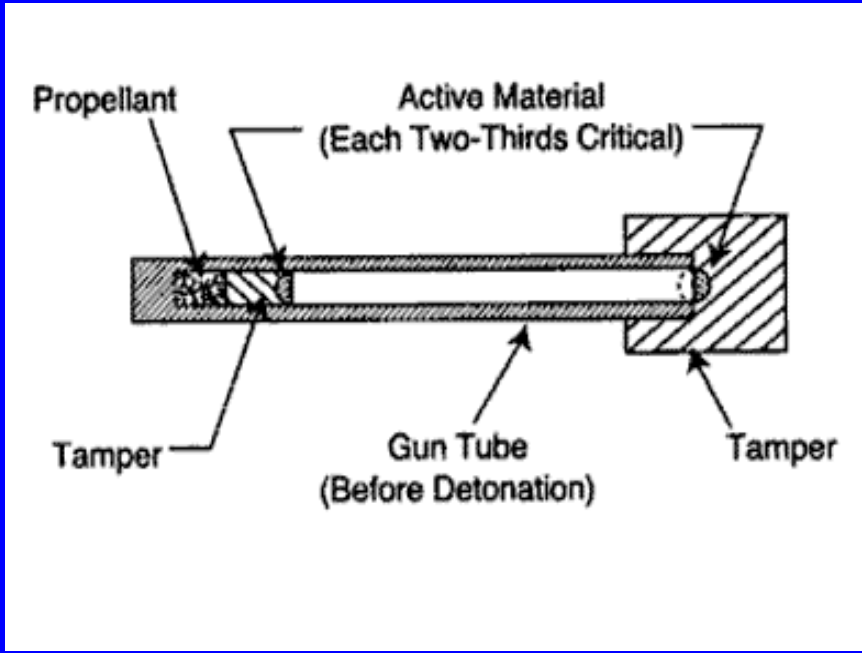

Source: NATO

Nuclear terrorism <u>anywhere</u> would be a global catastrophe

- Not just a risk to the United States
- Economic, political, military consequences would reverberate worldwide

"Were such an attack to occur, it would not only cause widespread death and destruction, but would stagger the world economy and thrust tens of millions of people into dire poverty…. [A]ny nuclear terrorist attack would have a second death toll throughout the developing world."

– *Kofi Annan, "A Global Strategy for Fighting Terrorism," March 10, 2005*

- Political consequences would doom prospects for large-scale nuclear growth, putting nuclear industry at risk

Insecure nuclear material anywhere is a threat to everyone, everywhere

Terrorists have global reach

- Attacks from:
  - New York to Moscow
  - London to Bali
  - Madrid to Morocco
- Before al Qaeda, Aum Shinrikyo sought nuclear and biological weapons, launched nerve gas attacks
  - Homegrown Japanese cult – could happen anywhere
  - No intelligence agencies were aware of them
- Embassies in Kenya and Tanzania attacked only because they were vulnerable American targets

Similarly, terrorists will get plutonium or HEU wherever the combination of their strength and the security system's weakness makes it easiest to steal

All states must protect HEU and Pu against a range of adversary capabilities

- All states should require all operators with Cat. I nuclear material to have security in place capable of defeating, with high confidence, a specified set of insider and outsider threats
- This design basis threat (DBT) should include <u>both</u>
  - Capabilities comparable to those terrorists and criminals have demonstrated in that country (or nearby)
  - Capabilities of terrorists with global reach
  - Even in the safest countries, HEU and Pu must be protected against a robust set of potential adversary capabilities
  - In high-threat countries, even more stringent security measures needed

Each nation has responsibility for protecting its nuclear materials – but all nations have an interest in seeing that other nations carry out that responsibility appropriately

Broad range of demonstrated adversary capabilities and tactics: outsider threats

- Large overt attack
  - e.g., Moscow theater, October 2002: ~ 40 well-trained, suicidal terrorists, automatic weapons, RPGs, explosives, no warning
- Multiple coordinated teams
  - e.g., 9/11/01 -- 4 teams, 4-5 participants each, well-trained, suicidal, from group with access to heavy weapons and explosives, >1 year intelligence collection and planning, striking without warning
- Use of deception
  - Uniforms, IDs, forged documents to get past checkpoints, barriers
- Significant covert attack
  - e.g., Pelindaba attackers disabling intrusion detectors
- Use of unusual vehicles or routes
  - e.g., arrival by sea or air
  - e.g., multiple cases of tunneling into bank vaults

Broad range of demonstrated adversary capabilities and tactics: insider threats

- Multiple insiders working together
  - Many cases fof theft from guarded facilities worldwide
- Often including guards
  - Most documented thefts of valuable items from guarded facilities involve insiders – guards among the most common insiders
  - Goloskokov: guards “the most dangerous internal adversaries”
- Motivations:
  - Desperation
  - Greed/bribery/corruption
  - Ideological persuasion
  - Blackmail

A trustworthy employee may not be trustworthy anymore if his family’s lives are at risk

For discussion: Adversary capabilities <u>all</u> HEU and Pu should be protected against

- Modest team of well-armed, well-trained outsiders
  - Capable of operating as more than one team
  - Automatic weapons and explosives
  - RPGs (available to terrorists in bazaars worldwide)
  - Help from an insider
- A well-placed insider
  - Knowledge of the security system
- Deception attacks
- Bombs that could be carried on a person, or in a car or van
- Unusual vehicles or routes

Protecting against at least this set of threats is a "best practice in implementing DBT methodology – high-threat countries must protect against more

Implementing the DBT

- National DBTs should be developed by groups with access to all relevant threat information – independent of operators
  - DBT must be *spectrum* of possibilities, not a single point estimate
- Operators must develop and implement security plans that provide effective protection against all elements of the DBT
- Regulators must review plans, inspect implementation to confirm that operators can protect against the DBT
- Assessment should include realistic full-system testing, designed to assess response to intelligent adversaries probing for the weak points
  - Can outsiders break in and steal material?
  - Can an insider steal material and smuggle it out?

International cooperation to implement effective nuclear security

- UNSC 1887 calls for securing all nuclear material within four years
  - Goal should be to ensure that all HEU and Pu worldwide is effectively protected against the full spectrum of plausible adversary threats in the country where it exists
  - In safest countries, against the threats terrorists with global reach could pose
- Countries should cooperate to achieve this goal
  - States which need help must take responsibility for asking for it
  - States able to to help must take responsibility for providing it
  - U.S.-Russian cooperation shows what can be accomplished
- International recommendations and agreements should be modified to call for states to implement such effective nuclear security measures (e.g., revision of INFCIRC/225)

Requirements of UNSCR 1540

- Arguably, states are already legally required to protect HEU and plutonium against plausible insider and outsider threats
- UNSC 1540 legally requires all states to put in place "appropriate effective" nuclear security and accounting
  - No definition of essential elements of "appropriate effective" systems
  - Plain English: must provide effective protection against demonstrated adversary threats
  - Leading nuclear states should seek common understanding of what must be in place for security systems to be "effective" as required
  - Then seek to help (and pressure) states to put those essential elements of effective systems in place

Ultimately, effective nuclear security should be part of "price of admission" for doing business in the international nuclear market

For further information…

- Website of the Managing the Atom project:
  - http://www.managingtheatom.org
- A major web section we maintain for the Nuclear Threat Initiative, *Controlling Nuclear Warheads and Materials*
  - http://www.nti.org/securingthebomb
- Includes our most recent report:
  - *Securing the Bomb 2008* (November 2008)
- *For regular e-mail updates from Managing the Atom, or to explore volunteer internships, write to* atom@harvard.edu