Securing nuclear stockpiles in four years – budget and policy requirements

Matthew Bunn
Harvard Kennedy School
"Security for a New Century"
24 February 2010
http://www.managingtheatom.org

What is the problem to be solved?

- Terrorists cannot make a nuclear bomb without nuclear material, the most likely way they could get nuclear material is for it to be stolen from an insecure stockpile
- Security for nuclear materials in many countries leaves too great a risk that terrorists and thieves could overcome it
- Pakistan
  - Small, heavily guarded stockpile
  - Immense insider and outsider threats
  - Risk reduction must include <u>both</u> strengthening nuclear security and reducing adversaries' capabilities
- Russia
  - World's largest stockpiles, in largest number of locations
  - Dramatically improved security and accounting
  - Important weaknesses remain – insider threats and corruption, sustainability, regulation, guard forces…

What is the problem to be solved? (II)

- HEU-fueled research reactors
  - Most have modest stocks (though some have large, high-quality stocks)
  - Most have very modest security measures in place
  - Particular issues in developing or transition countries with substantial HEU stocks (Ukraine, Belarus, South Africa, Kazakhstan)
- Other areas also pose risks
  - Transports – frequent, more difficult to secure against attack
  - Plutonium separation – creates unneeded risks
- Rich countries also pose risks
  - Some have large stocks of HEU or plutonium, no on-site armed guards, or protection against only very modest threats
  - NRC-regulated HEU-fueled research reactors in the United States a prime example

What should the mission be?

- Achieve effective and lasting security for all nuclear weapons and stocks of plutonium and HEU worldwide within four years – while consolidating to the minimum number of locations
  - Effective = provides high-confidence protection against demonstrated terrorist and criminal capabilities
    - » Not only installed systems but effective security culture
  - Lasting = countries can and will sustain effective security with their own resources (and have effectively enforced regulations in place that require the necessary measures to be maintained)
  - All = not just in Russia and the former Soviet Union, not just in developing countries, but in all countries – global problem, and wealthy developed countries also an issue
  - Consolidating = reducing number of weapons and materials sites wherever possible, especially removing material from the most vulnerable, difficult-to-defend sites (such as civilian research reactors)

What targets can we hope to meet in four years?

- Drastically reduce number of countries with weapons-usable nuclear material on their soil
  - >50% reduction may be possible
- Reduce number of locations where nuclear material exists
  - >30-50% reduction may be possible
  - Large-scale conversion or shut-down of HEU-fueled reactors
  - Further reductions will be possible beyond four-year period
- All remaining countries provide highly effective security
  - Safest countries: protect against insider, modest group of well-armed, well-trained outsiders (>1 team), range of tactics
  - Countries facing higher threats must protect against more
  - Countries such as Russia, China, India, could have highly effective national rules and procedures in place by end of four years
  - In Pakistan, success should include progress in reducing extremist threats – no nuclear security system can cope with unlimited threats

Required budgets depend on strategy – but substantial funds will be needed

- Different approaches involve different U.S. costs
  - U.S.-funded security upgrades worldwide would be expensive
  - But for many countries, approach will be convincing them to upgrade nuclear security themselves
- *But*, to do more, faster, will cost more money
  - Paying for more reactor conversions
  - Paying for more HEU and plutonium removals
  - Paying for upgrading sites to higher standards of security
  - Paying for upgrading more sites
  - Offering incentives to convince sites to convert/shut down/give up their HEU
  - Expanding cooperation on regulations, sustainability, security culture to more countries

Some highlights of the FY2011 nuclear security request

- GTRI:
  - $559 million (+$225M, 67% boost from last year)
  - Will fund accelerated HEU removals, reactor conversions, some additional security upgrades at HEU-fueled reactors and for radiological sources
- CTR:
  - New $74.5M line for “Global Nuclear Lockdown”
  - Will fund regional nuclear security “centers of excellence”, dealing with irradiated HEU naval fuel in Russia, some sustainability in Russia
- MPC&A:
  - +$25M for expanded upgrades in Russia, non-FSU countries

At least these amounts – and probably more – will be needed to have any hope of achieving the four-year goal

Goal/Program		FY08 Estimated	FY09 Request	FY09 Approp.	Change from FY08		Change from FY09 Request	
Total, Improving Controls on Nuclear Weapons, Material, and Expertise		**$1,324**	**$1,083**	**$1,235**	**-$89**	**-7%**	**+152**	**+14%**
Securing Nuclear Warheads and Materials		**639**	**506**	**669**	**+30**	**+5%**	**+163**	**+32%**
Material Protection, Control, & Accounting (excl. SLD)	Energy	358	217	202	-156	-44%	-15	-7%
Nuclear Weapons Storage Security - Russia	Defense	46	24	24	-22	-47%	0	0%
Global Threat Reduction Initiative	Energy	193	220	395	+202	+104%	+175	+80%
Nuclear Weapons Transportation Security - Russia	Defense	38	41	41	+3	+9%	0	0%
International Nuclear Security	Energy	5	5	5	0	0%	0	0%
Interdicting Nuclear Smuggling		**385**	**315**	**311**	**-74**	**-19%**	**-4**	**-1%**
Second Line of Defense (part of MPC&A budget line)	Energy	267	213	198	-69	-26%	-15	-7%
Export Control and Related Border Security Assistance	State	46	41	44	-2	-4%	+3	+7%
WMD Proliferation Prevention	Defense	58	50	59	+1	+2%	+9	+17%
International Counterproliferation [1]	Defense	14	10	10	-4	-30%	0	0%
Stabilizing Employment for Nuclear Personnel		**92**	**91**	**84**	**-8**	**-9%**	**-7**	**-8%**
Global Threat Reduction Program [2]	State	57	64	61	+4	+7%	-3	-5%
Global Initiatives for Proliferation Prevention	Energy	31	24	19	-12	-39%	-5	-20%
Civilian Research and Development Foundation [3]	State	5	4	4	-1	-13%	0	+0%
Monitoring Stockpiles and Reductions		**28**	**29**	**29**	**+1**	**+3%**	**0**	**0%**
HEU Transparency Implementation	Energy	14	15	15	+1	+4%	0	0%
Warhead and Fissile Material Transparency	Energy	14	14	14	0	0%	0	0%
Ending Further Production		**180**	**141**	**141**	**-39**	**-22%**	**0**	**0%**
Elimination of Weapons Grade Plutonium Production	Energy	180	141	141	-39	-22%	0	0%
Reducing Excess Stockpiles		**0**	**1**	**1**	**+1**		**0**	
Russian Plutonium Disposition	Energy	0	1	1	+1		0	

Cooperative threat reduction is a tiny portion of overall spending

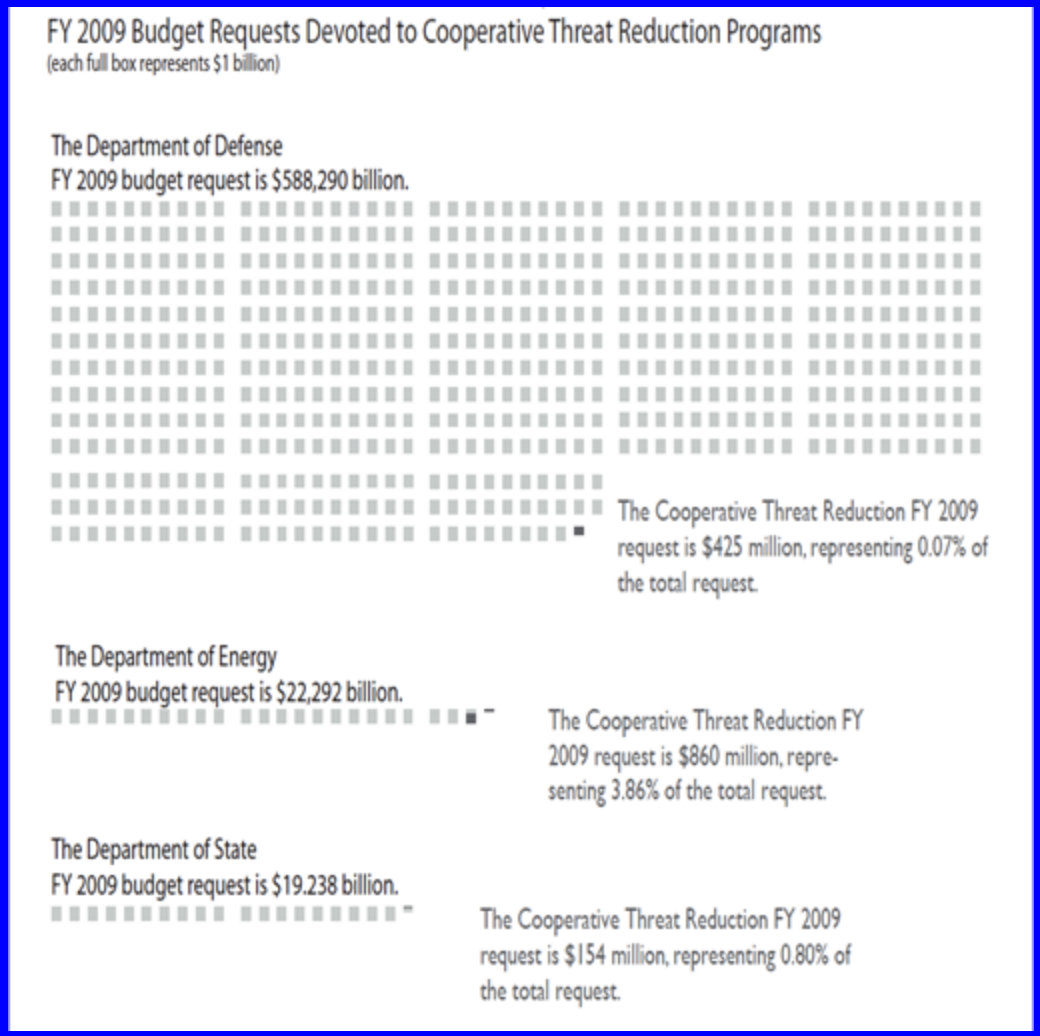

Source: Author's estimates, described in Securing the Bomb 2008

What's required?

- Sustained White House leadership to overcome obstacles
  - Complacency – many policymakers, nuclear managers do not believe nuclear terrorism is a realistic threat
  - Secrecy and sovereignty
  - Political disputes
  - Bureaucratic obstacles
- Comprehensive plan
  - Assign responsibilities
  - Match resources to objectives
  - Indicators to assess progress
  - Flexibility to close gaps, seize opportunities
- Adequate resources
  - Both money and people

Leadership is more important than money – but more money will be needed if obstacles can be overcome

Belief in the threat – the key to success

- Effective and lasting nuclear security worldwide will not be achieved unless key policymakers and nuclear managers around the world come to believe nuclear terrorism is a real threat to *their* countries' security, worthy of investing their time and resources to address it
- Steps to convince states this is a real and urgent threat:
  - Intelligence-agency discussions – most states rely on their intelligence agencies to assess key security threats
  - Joint threat briefings – by their experts and our experts, together
  - Nuclear terrorism exercises and simulations
  - "Red team" tests of nuclear security effectiveness
  - Fast-paced nuclear security reviews – by teams trusted by the leadership of each country
  - Shared databases of real incidents related to nuclear security, capabilities and tactics thieves and terrorists have used, lessons learned

Some opportunities for Congress

- Establish new incentives to move away from use of potential bomb material
  - Fund domestic production of medical isotopes without HEU
  - Require phase out of HEU exports
  - Stop imports of HEU-produced medical isotopes once sufficient supply of non-HEU medical isotopes available
  - Offer ~$10K/kg for countries to ship out their HEU
- Mandating priority for intelligence support to reducing nuclear terrorism risks
  - E.g., collecting information on security conditions, terrorist and criminal activity, staff pay, morale, corruption at sites with weapons-usable materials – "how much do the people at this research reactor get paid? Is there a lot of organized crime there?"
  - NMIP making progress, but more emphasis on above issues needed

More opportunities for Congress (II)

- Helping states implement effective controls required by UNSC 1540
  - Expanded programs to strengthen criminal laws, upgrade export controls, border controls, transshipment controls in many countries
- Modify mandate for 100% scanning of containers into systems-level approach – with “red teaming” to probe vulnerabilities – to make it as difficult as we cost-effectively can to get nuclear weapons and materials into United States by *any* routes
- Fund non-government analysis – small investments can lead to large returns in improved program effectiveness
- Support for effective nuclear forensics program – but realism as to what forensics can offer

More opportunities for Congress (III)

- Mandating launch of particular new initiatives
  - E.g., U.S.-Russian reciprocal initiative—modeled in part on Bush-Gorbachev 1991 initiatives—to secure, monitor, dismantle 1000s of the most dangerous warheads (esp. tactical weapons without modern electronic locks)
- Ensuring effective security within the United States
  - Require similar security for HEU and plutonium, whether at DOE, DOD, or NRC-regulated facilities
  - Phase out security exemptions for HEU-fueled reactors (while directing DOE to pay resulting security costs)
  - Strengthen protections against insider threats
  - Mandate programs to regularly assess, improve, security culture
  - *Difficult to convince other countries to provide effective security if we fail to do so ourselves*

The challenge

- Lugar Doctrine: war on terrorism will not be won until every nuclear bomb and cache of bomb material everywhere in the world is secure and accounted for to stringent and demonstrable standards

On the day after a nuclear terrorist attack, what would we wish we had done to prevent it?

Why aren't we doing it now?

For further reading…

- A major web section we maintain for the Nuclear Threat Initiative, *Securing the Bomb:*
  - http://www.nti.org/securingthebomb
- Includes hundreds of pages of analysis, links, and databases, and our most recent reports:
  - "Funding for U.S. Efforts to Improve Controls Over Nuclear Weapons, Materials, and Expertise Overseas: a 2009 Update" (June 2009)
  - *Securing the Bomb 2008* (November 2008)
  - "Preventing Nuclear Terrorism: An Agenda for the Next President" (November 2008)
  - *Securing the Bomb 2007* (September 2007)
- *For regular e-mail updates from Managing the Atom, write to* atom@harvard.edu

Backup slides if needed…

-

What is the proposed solution?

- President Obama in Prague:
  - nuclear terrorism is the “most immediate and extreme threat to global security”
  - launching “a new international effort to secure all vulnerable nuclear material around the world within four years”
  - “we will set new standards, expand our cooperation with Russia, pursue new partnerships to lock down these sensitive materials”
  - Also “break up black markets, detect and intercept materials in transit, and use financial tools to disrupt this dangerous trade”
  - Turn Proliferation Security Initiative and Global Initiative to Combat Nuclear Terrorism into “durable” int’l institutions
  - *Nuclear security summit* – now scheduled for 12-13 April 2010
- Four-year nuclear security effort unanimously endorsed by UN Security Council Resolution 1887
- Nearly all countries with weapons material coming to nuclear security summit – a critical opportunity for progress

Terrorists are seeking nuclear weapons – al Qaida nuclear bomb sketch

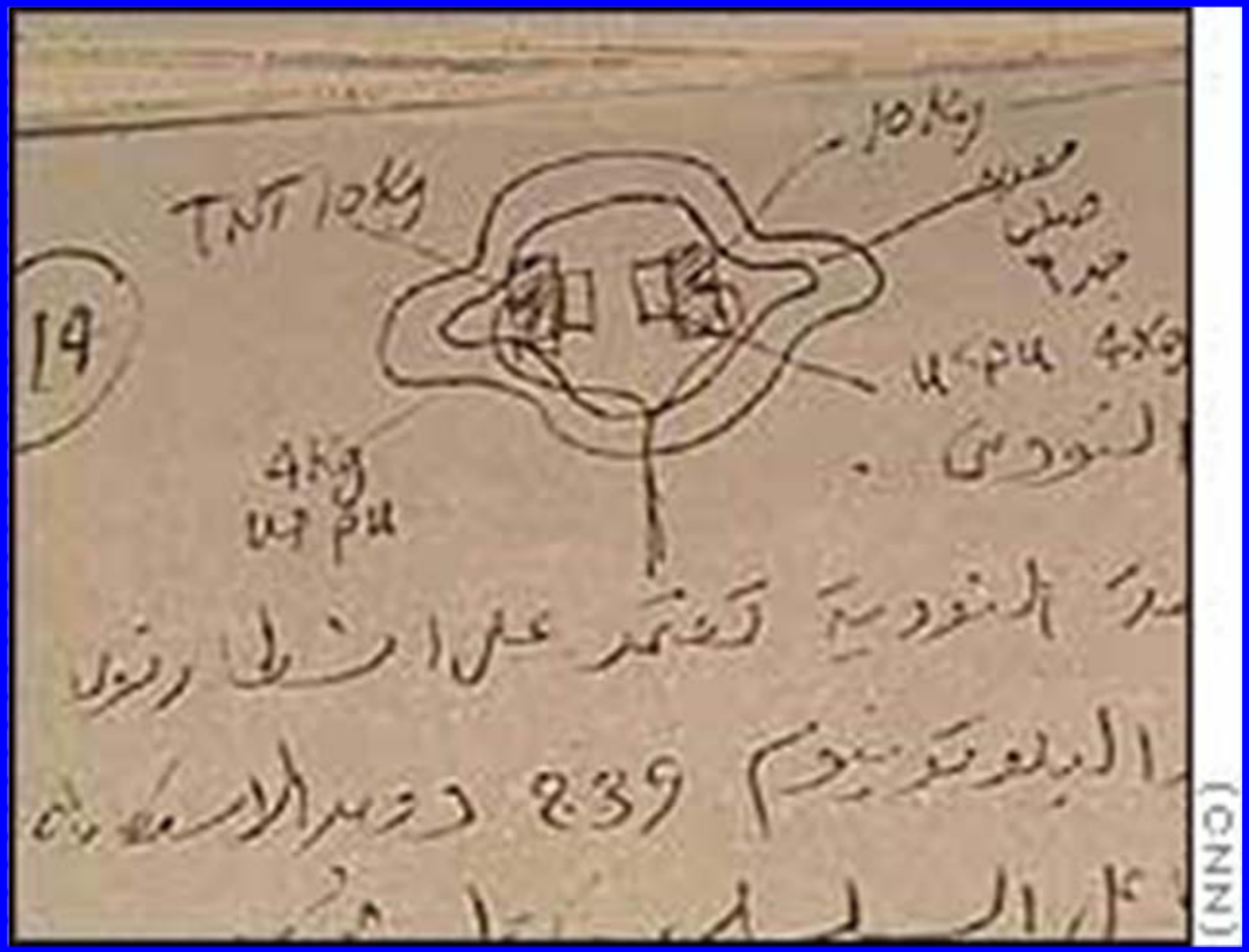

Source: CNN

With nuclear material, terrorists may be able to make crude nuclear bombs

- With HEU, gun-type bomb – as obliterated Hiroshima – very plausibly within capabilities of sophisticated terrorist group
- Implosion bomb (required for Pu) more difficult, still conceivable (especially if they got help)

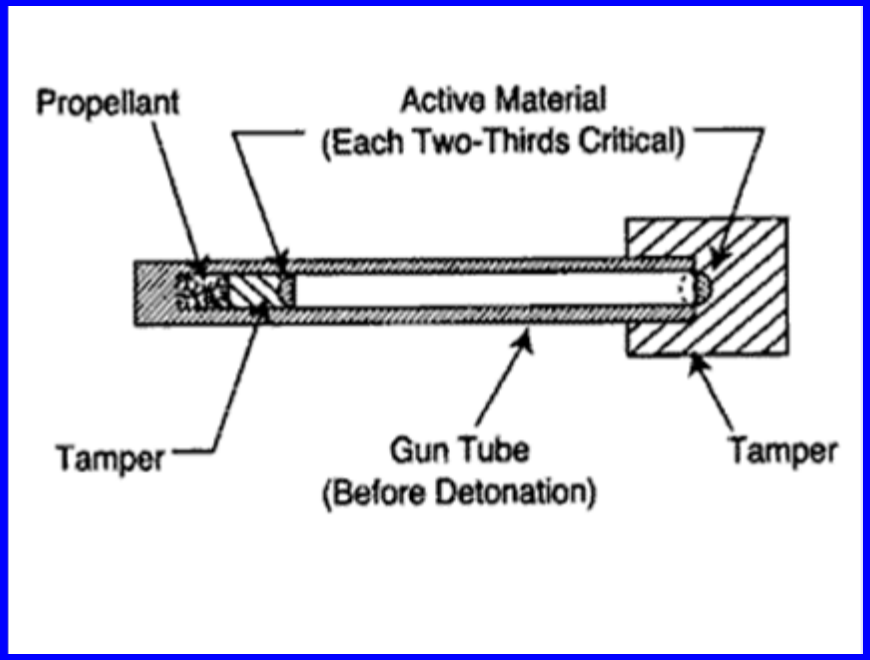

Source: NATO

Security culture matters: Propped-open security door

Source: GAO, Nuclear Nonproliferation: Security of Russia's Nuclear Material Improving, More Enhancements Needed *(GAO, 2001)*

Nuclear material is not hard to smuggle – plutonium box for first-ever bomb

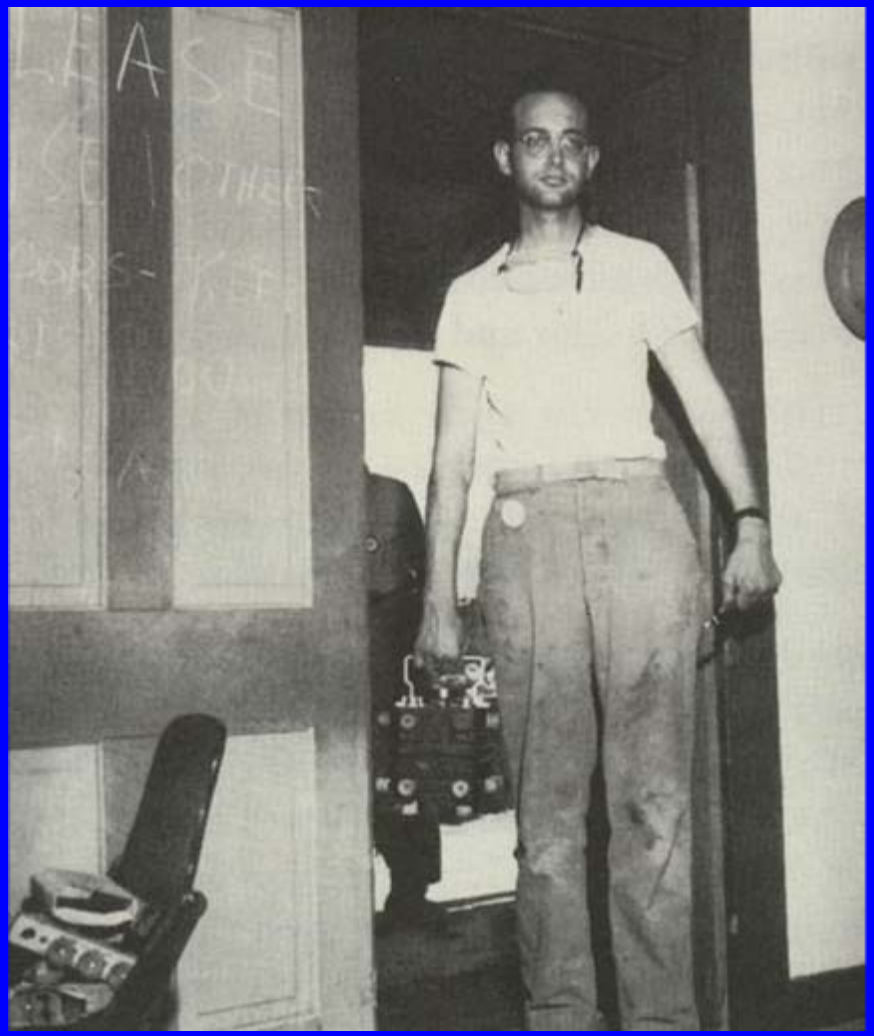

Source: Los Alamos

Blocking the Terrorist Pathway to the Bomb

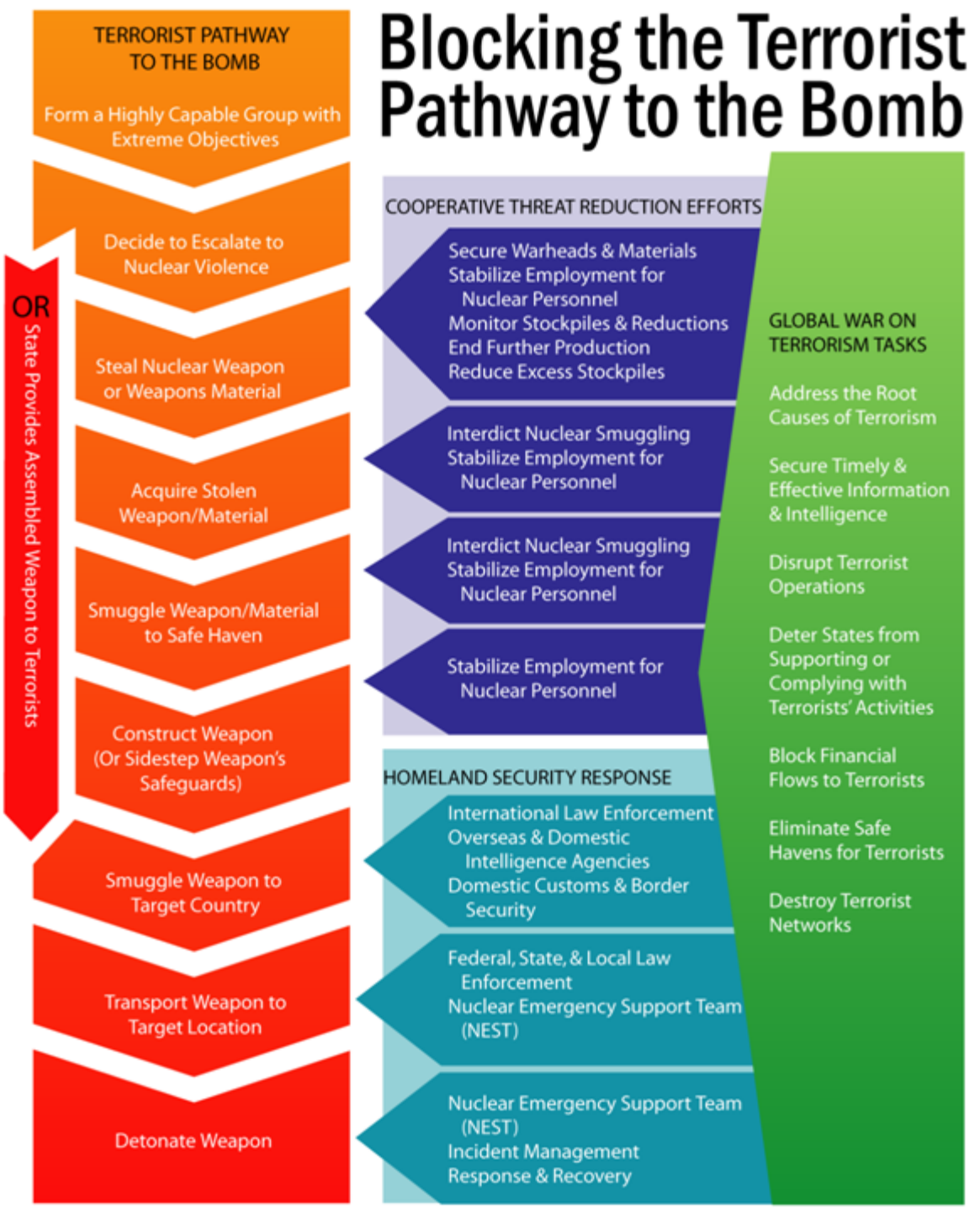

Source: Bunn, Wier, Holdren, Controlling Nuclear Warheads and Materials: A Report Card and Action Plan (2003)