Preventing Nuclear Terrorism: Russia and the United States Must Lead a Global Nuclear Security Partnership

Matthew Bunn, Harvard University

"MPC&A 2005," Obninsk, Russia
May 16-20, 2005

http://www.managingtheatom.org
http://www.nti.org/cnwm

Five key points

- Some terrorists are seeking nuclear weapons – and would use them if they got them
- A sophisticated terrorist group might well be able to make a crude nuclear bomb if they could get HEU or plutonium
- Hence, insecure nuclear stockpiles anywhere are a threat to everyone, everywhere, including to Russia – all stockpiles worldwide must be well enough secured and accounted for to defeat demonstrated terrorist and criminal threats
- Russia and the United States, as the states with the largest stockpiles, must lead a global effort to upgrade nuclear security – including ensuring high levels of security within their own countries
- Presidential leadership will be needed to overcome obstacles

Terrorists are seeking nuclear weapons

- Al Qaeda and the global jihadi network:
  - Bin Laden has repeatedly said he wants a nuclear bomb
  - Documented efforts to get stolen bomb material going back to 1993
  - Attempts to recruit nuclear weapon scientists (e.g., Mahmoud)
  - Extensive documents on nuclear efforts found in Afghanistan
  - In 2003, bin Laden sought and received a religious ruling authorizing the use of nuclear weapons against civilians as permissible under Islamic law
- Extreme Chechen factions:
  - Russian officials confirm 2 incidents of terrorist teams carrying out reconnaissance at secret nuclear warhead storage facilities – *Rossiskaya Gazeta* reports two more on warhead trains
  - *Rossiskaya Gazeta* reports Nord-Ost terrorists considered seizing Kurchatov Institute
  - Repeated statements threatening nuclear sabotage or radiological attack – plans uncovered for seizing nuclear submarine

Al Qaida nuclear bomb design

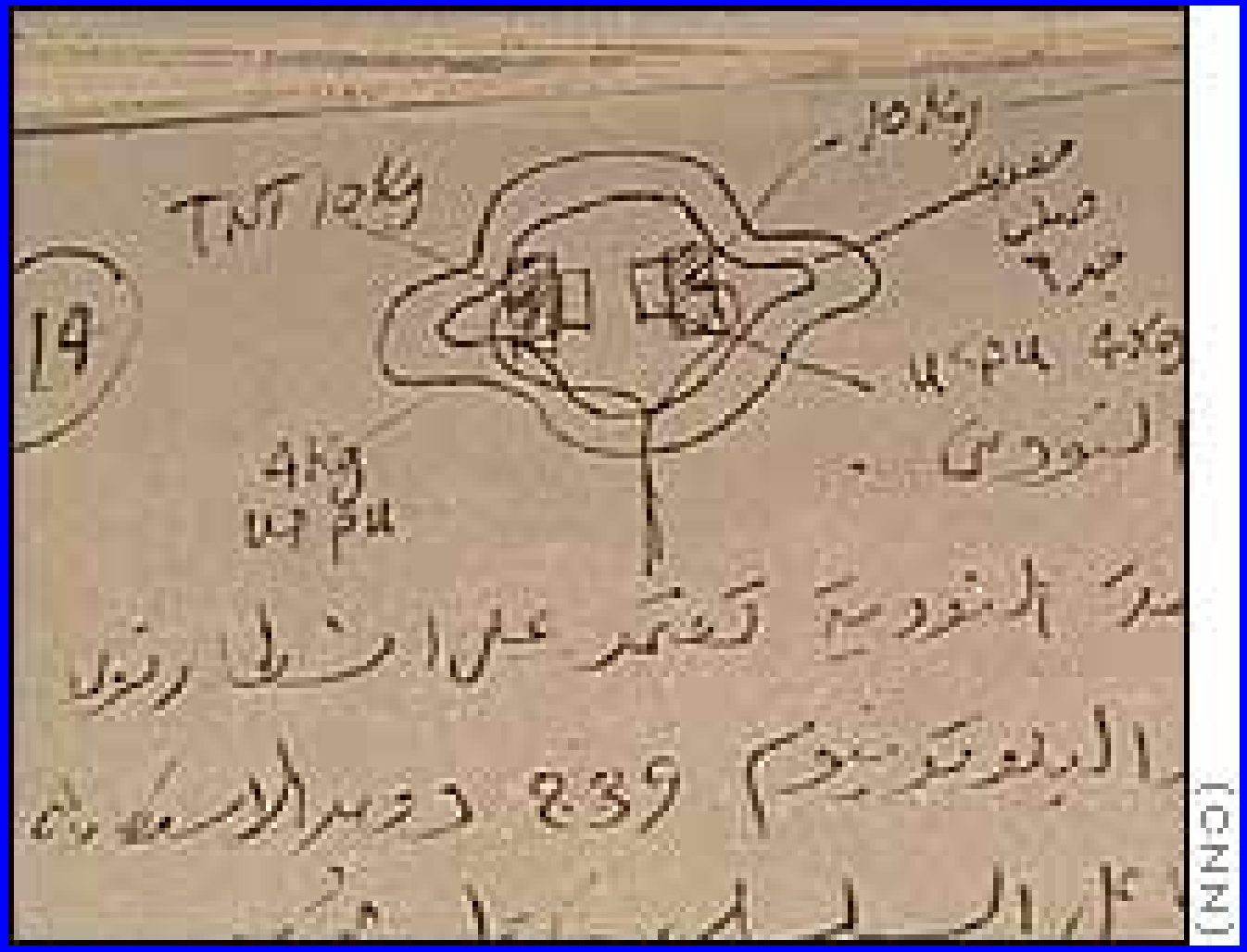

(CNN)

With nuclear material, terrorists may be able to make crude nuclear bombs

- With HEU, gun-type bomb – as obliterated Hiroshima – very plausibly within capabilities of sophisticated terrorist group
- Implosion bomb (required for Pu) more difficult, still conceivable (especially if they got help)

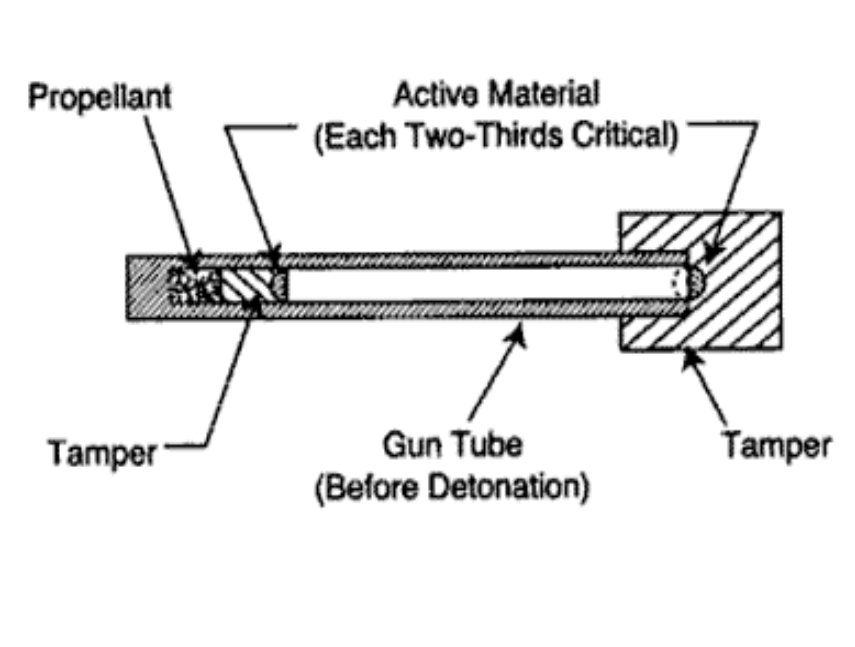

Hiroshima – result of a gun-type bomb

Nuclear material is not hard to smuggle – plutonium box for first-ever bomb

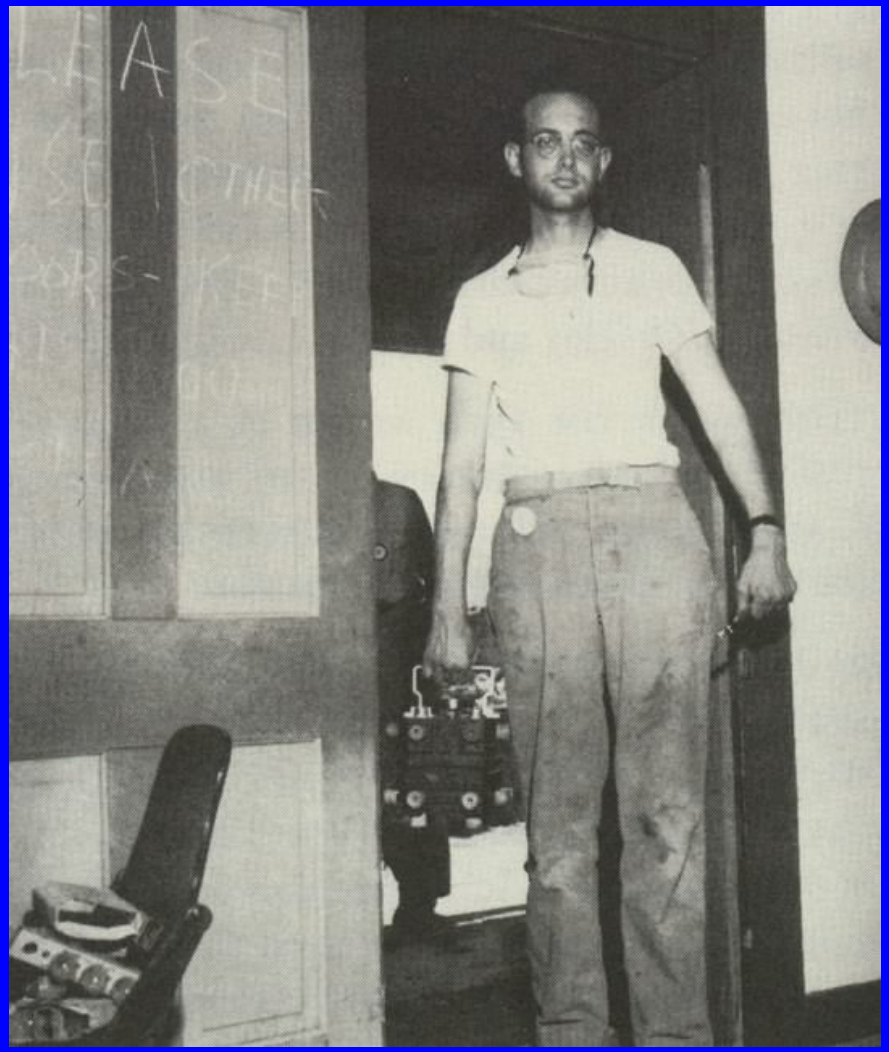

Summary: the nuclear terrorist threat

	Yes	No
◆ Do terrorists want nuclear weapons? – Clear Bin Laden statements, some Chechen interest	☑	☐
◆ Is it conceivable terrorists could make a crude bomb if they got the material?	☑	☐
◆ Is there material that might be vulnerable to theft and transfer to terrorists?	☑	☐
◆ Is it likely that terrorists, if they had a crude device, could smuggle it to Moscow, Washington, or New York?	☑	☐

Nuclear terrorism is a grave threat to Russia's national security

- Turning central Moscow into a modern Hiroshima would be an unimaginable catastrophe – Beslan terrorists would do it if they could
- Putin and Bush: nuclear terrorism one of the "gravest threats" to both Russia and the United States (2/05), cooperation to prevent it must be strengthened
- Rumiantsev: "today, we have to admit that we cannot fully rule out the possibility that fissile materials, including highly-enriched uranium and plutonium, as well as technologies suitable for manufacturing nuclear weapons, may fall into the hands of international terrorists." (9/04)
- For its own security, Russia should want to be assured that nuclear stockpiles in the United States, Russia, and around the world are secure and accounted for

Much has been accomplished to reduce this threat

- Russian unilateral steps to tighten security for nuclear facilities -- especially since Chechen terrorist attacks, 9/11
- U.S.-Russian cooperation has improved security for hundreds of tons of potential bomb material, thousands of nuclear warheads, at dozens of sites
- Enough bomb material for thousands of nuclear weapons has been permanently destroyed
- Project Vinca (removal of HEU from Yugoslavia), other HEU removals, have showed potential for U.S.-Russian cooperation to address insecure stockpiles around the world
- Hundreds of dedicated Russian and U.S. experts have made major contribution to world security

But much remains to be done: progress of U.S.-funded programs to date

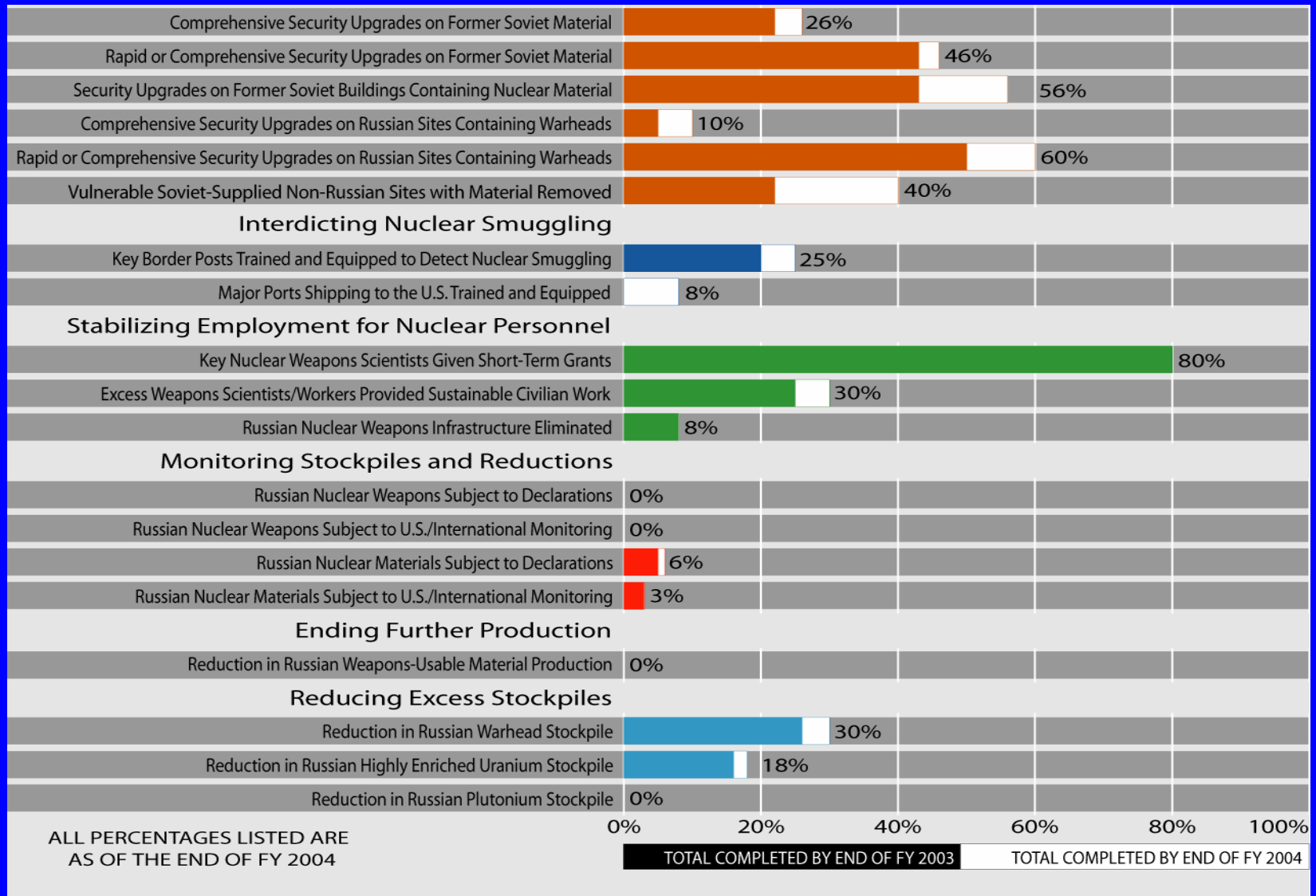

U.S. budgets for cooperation on nuclear warheads, materials, and expertise

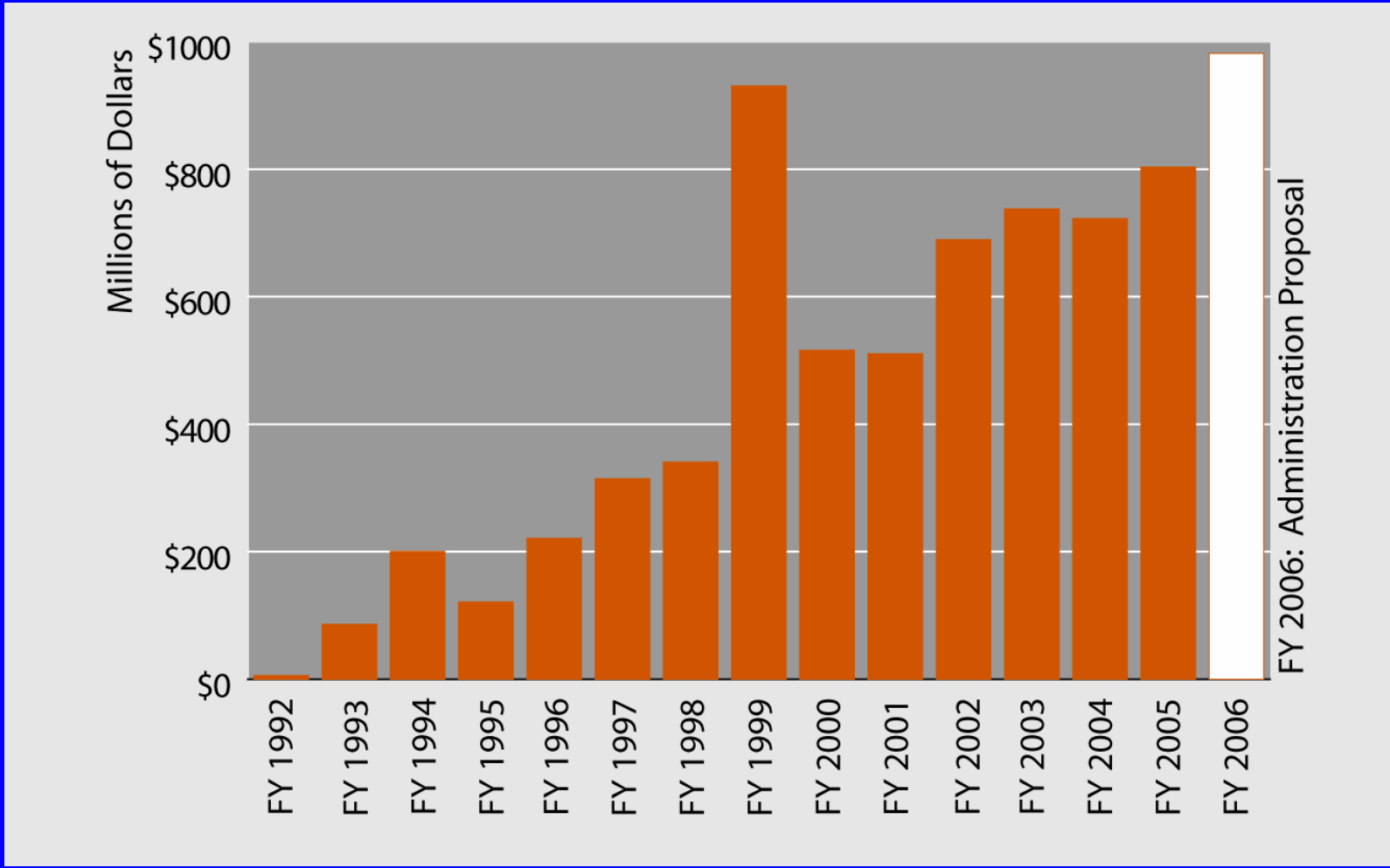

Securing nuclear stockpiles -- a global problem

- Thousands of tons of weapons-usable nuclear material exist in hundreds of buildings in more than 40 countries worldwide
- Security ranges from excellent to appalling -- no binding global standards in place
- >130 operational research reactors fueled with HEU in ~ 40 countries – most with modest security
- Pakistan: small nuclear stockpile, heavily guarded – but huge threats, outsider and insider
- Russia has world's largest stocks, still in transition from Soviet security system not designed for open society with open borders – other Eurasian states have little experience, few resources, for guarding nuclear materials

Nuclear security in Russia

- Russia deserves immense credit for preventing a proliferation crisis following the Soviet collapse, in the difficult transition of the 1990s
- Substantial improvements over the last decade
- But work left to do:
  - President Putin: physical protection systems “aging”, past funding “insufficient,” terrorist threat to Russia’s facilities “increasing” (12/03 directive)
  - Rumiantsev: nuclear security spending needs to be increased by 4-5 times (3/03 testimony to Duma)
  - Col-Gen. Barayev (chief of MVD troops Moscow district): only 7 critical guarded facilities in district have adequate security equipment, 39 have “serious shortcomings” (3/05)
- Security systems must reliably defeat substantial outsider attacks (e.g., Beslan), insider conspiracies

The solution: a global nuclear security partnership, led by Russia and the U.S.

- Fast-paced effort to ensure that every nuclear weapon, every kilogram of separated plutonium and HEU worldwide is secure and accounted for
- Russia and the United States have >95% of the world's nuclear weapons, >80% of the world's HEU and separated plutonium; hence, have experience, responsibility to lead a global effort to secure all stockpiles
- Current Russia-U.S. cooperation must be transformed into real partnership – expanded from Russia to global focus
- To be credible with the rest of the world, United States and Russia must ensure high standards of security and accounting within their own countries
- Need to build effective global nuclear security standards – nuclear security only as strong as its weakest links

A global nuclear security partnership (II)

- Accelerate, strengthen, U.S.-Russian effort
  - Complete upgrades by end of 2008
  - Put in place resources, organizations, incentives to ensure effective security and accounting will be sustained, improved, after U.S. assistance phases out – high-level Russian commitment needed
  - Strengthen "human factor" – additional training, incentives, organizational changes
  - Bratislava provides foundation – but sustained presidential follow-through will be needed to overcome obstacles, assign resources
- Quickly remove nuclear material from vulnerable sites
  - Seek to eliminate all civilian use of HEU within 10 years
  - Includes converting research reactors to LEU, shutting down facilities that are no longer needed, shipping HEU back to country of origin (or other secure location)
  - Global Threat Reduction Initiative provides foundation – but targeted incentives needed for each facility

A global nuclear security partnership (III)

- Global effort to secure stockpiles worldwide
  - Need security measures adequate to meet the local threats everywhere – from Pakistan to Japan to South Africa
  - Overcoming obstacles with states such as Pakistan, India, China will require perseverance and creativity; will likely need to be pitched as them joining leading nuclear states in a common global partnership, not them needing assistance to control their stocks
  - Foundation is UNSC 1540 – creates binding legal obligation on all states to have “appropriate effective” security for nuclear stockpiles. Should act now to lay out essential elements of effective systems, help states to put those elements in place
  - As with the other steps, day-in, day-out engagement from presidential level will likely be needed to overcome obstacles, seize opportunities
  - New Nuclear Terrorism Convention, amendments to the Physical Protection Convention, are useful but will not, by themselves, achieve these objectives

Russia-U.S. cooperation: from donor-recipient to true partnership

- Russia should:
  - Provide more of its own resources for nuclear security upgrades – with high-level commitment to provide the resources to sustain effective nuclear security and accounting after assistance ends
  - Provide more openness to facilitate cooperation
  - Actively seek to help address nuclear security abroad
- The United States should:
  - Genuinely involve Russian experts at every stage of planning and implementation; seek Russian advice (and tech.) for U.S. sites
  - Drop linkages to unrelated political issues
- Both sides should:
  - Identify this effort as a top national security priority
  - Compromise to overcome key obstacles (e.g., access, liability)
  - Appoint senior full-time officials to push effort forward

Nuclear security upgrades at U.S. Department of Energy after 9/11

- Immediate increase in number of guards at key sites
- Team dispatched for fast-paced review of nuclear security vulnerabilities, recommendations to fix them
- New rules requiring facilities to be able to defend against larger and more deadly terrorist threats
- Major effort to consolidate material in fewer buildings and sites – achieves higher security at lower cost
- Efforts to transform guards into an elite fighting force
- Substantial and sustained increase in spending on nuclear security – increase of $100s of millions/year

Nuclear security steps the United States still needs to take

- If the United States wants to convince other states to provide high security for nuclear stockpiles, and eliminate potential bomb material where it is not needed, it needs to do the same itself:
  - Eliminate gap in rules permitting HEU-fueled research reactors to have substantial quantities of non-self-protecting HEU without substantial security
  - Provide funds to convert U.S. HEU-fueled research reactors to LEU
  - Modify DOE rules that categorize some material that could be attractive to terrorists for use in nuclear weapon as not requiring high security
  - Require reactors using MOX fuel to meet main Category I rules
  - Continue seeking to consolidate nuclear materials at fewer locations
  - Continue rigorous effort to find and fix security weaknesses

Nuclear security upgrades – what has Russia done after Beslan?

- Immediate increase in number of guards at key sites
- Air defense to defend some key sites
- Monitored areas around nuclear plants expanded
- Team dispatched for fast-paced review of nuclear security vulnerabilities, recommendations to fix them
- New rules requiring facilities to be able to defend against larger and more deadly terrorist threats
- Major effort to consolidate material in fewer buildings and sites – achieves higher security at lower cost
- Efforts to transform guards into an elite fighting force
- Substantial and sustained increase in spending on nuclear security – hundreds of millions of add'l dollars/year

Sustainability – the key to long-term success

- Both U.S. and Russian security will be endangered if MPC&A equipment is largely broken and unused 10 years after international assistance phases ends
- Russia must commit to providing its own resources to sustain effective security and accounting – U.S. and Russian experts must lay out sensible transition plan
- Requires comprehensive approach to putting in place the *resources*, *organizations*, and *incentives* to ensure that security will be maintained and necessary investments made – including (but not limited to) effective (and effectively enforced) nuclear security rules and regulations
- "Human factor"="security culture" – belief by all concerned that the threat is real and security must be given high priority – critical to success

The challenge

- The Bratislava statement gives us all a challenge – if terrorists with nuclear weapons truly pose one of the "gravest threats" to U.S., Russian, and world security:
  - What specific actions should we each be taking to help reduce the threat?
  - What specific actions should we recommend that President Bush and President Putin take? And how do we convince them to take those steps?

On the day after a nuclear terrorist attack, what would we wish we had done to prevent it?

Why aren't we doing it now?

2010: the vision

- No nuclear terrorism has occurred, no nuclear weapons or materials have fallen into the hands of terrorists or hostile states
- All nuclear weapons and weapons-usable nuclear material worldwide are secure and accounted for, to stringent international standards
- All high-consequence nuclear facilities are secure from both outsider and insider sabotage and attack
- All large radiological sources are under effective control
- Effective measures are in place to interdict nuclear smuggling
- There is sufficient transparency to give the international community confidence these steps have been taken

2010: the danger

- Multiple unrecovered thefts of weapons-usable nuclear material have occurred
- Weapons-usable nuclear materials in some countries around the world remain dangerously insecure – as do nuclear power plants and spent fuel facilities in some countries
- Substantial numbers of large radioactive sources remain unaccounted for
- Intelligence indicates that a thriving black market in nuclear material exists, and that several terrorist groups, as well as hostile states have gained access to enough weapons-usable material for a bomb
- Nuclear terrorist attacks may have already occurred – or could occur at any time

For further reading…

- A major web section we maintain for the Nuclear Threat Initiative, *Controlling Nuclear Warheads and Materials*
  - http://www.nti.org/cnwm
- Includes our most recent reports:
  - *Securing the Bomb 2005: The New Global Imperatives* (May 2005)
  - *Securing the Bomb: An Agenda for Action* (May 2004)
  - *Controlling Nuclear Warheads and Materials: A Report Card and Action Plan* (March 2003)
- *For regular e-mail updates from Managing the Atom, write to* atom@harvard.edu