Reducing Global Dangers From HEU

Matthew Bunn, Harvard University

Moscow Conference on Global Partnership Against the Spread of Weapons and Materials of Mass Destruction
April 23-34, 2004

http://www.ksg.harvard.edu/bcsia/atom

Why HEU matters

- Easiest material from which to make a nuclear bomb – unlike plutonium, can make gun-type bomb -- more likely to be achievable by terrorist group
- Bin Laden has called acquiring WMD a “religious duty,” has sought to buy HEU -- seized al Qaida papers document significant nuclear bomb effort
- 10 kiloton bomb in Manhattan on typical work day could kill half a million people, require evacuation of whole island – similar impact if set off in center of Moscow
- Amount required easily fits in a briefcase (in a Coke can for an implosion-type bomb).
- In addition to terrorists, HEU focus of some state proliferators (e.g., Iraq, Iran, Pakistan, now N. Korea)

Possibility of terrorist nuclear attack is very real

Simplicity of a gun-type bomb

- All that is required is to get the two parts of a critical mass of HEU together fast enough – if that is done, explosive nuclear chain reaction will occur
- Implosion bomb (required for Pu) more difficult for terrorists, still conceivable (especially if they got knowledgeable help)

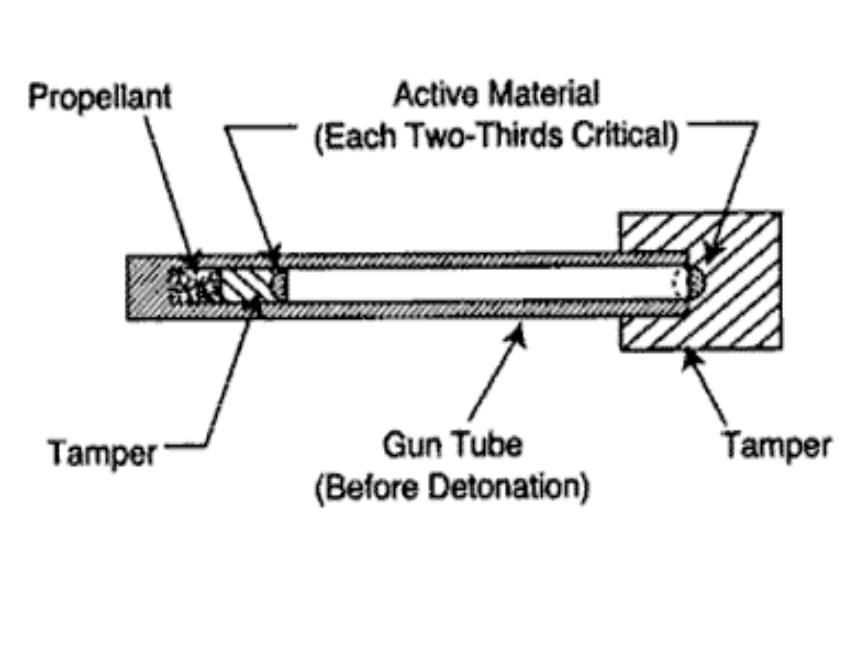

Terrorists could plausibly make a bomb

A small group of people, none of whom have ever had access to the classified literature, could possibly design and build a crude nuclear explosive device. They would not necessarily require a great deal of technological equipment or have to undertake any experiments. Only modest machine-shop facilities that could be contracted for without arousing suspicion would be required. The financial resources for the acquisition of necessary equipment on open markets need not exceed a fraction of a million dollars. The group would have to include, at a minimum, a person capable of researching and understanding the literature in several fields and a jack-of-all trades technician.

- *U.S. Office of Technology Assessment*

- Huge difference between building a safe, reliable, efficient, missile-deliverable weapon and a crude terrorist bomb
- *Complacent belief that building a bomb would be an insurmountable challenge for terrorists is not justified*

Hiroshima -- result of a gun-type bomb

Al Qaida nuclear bomb design

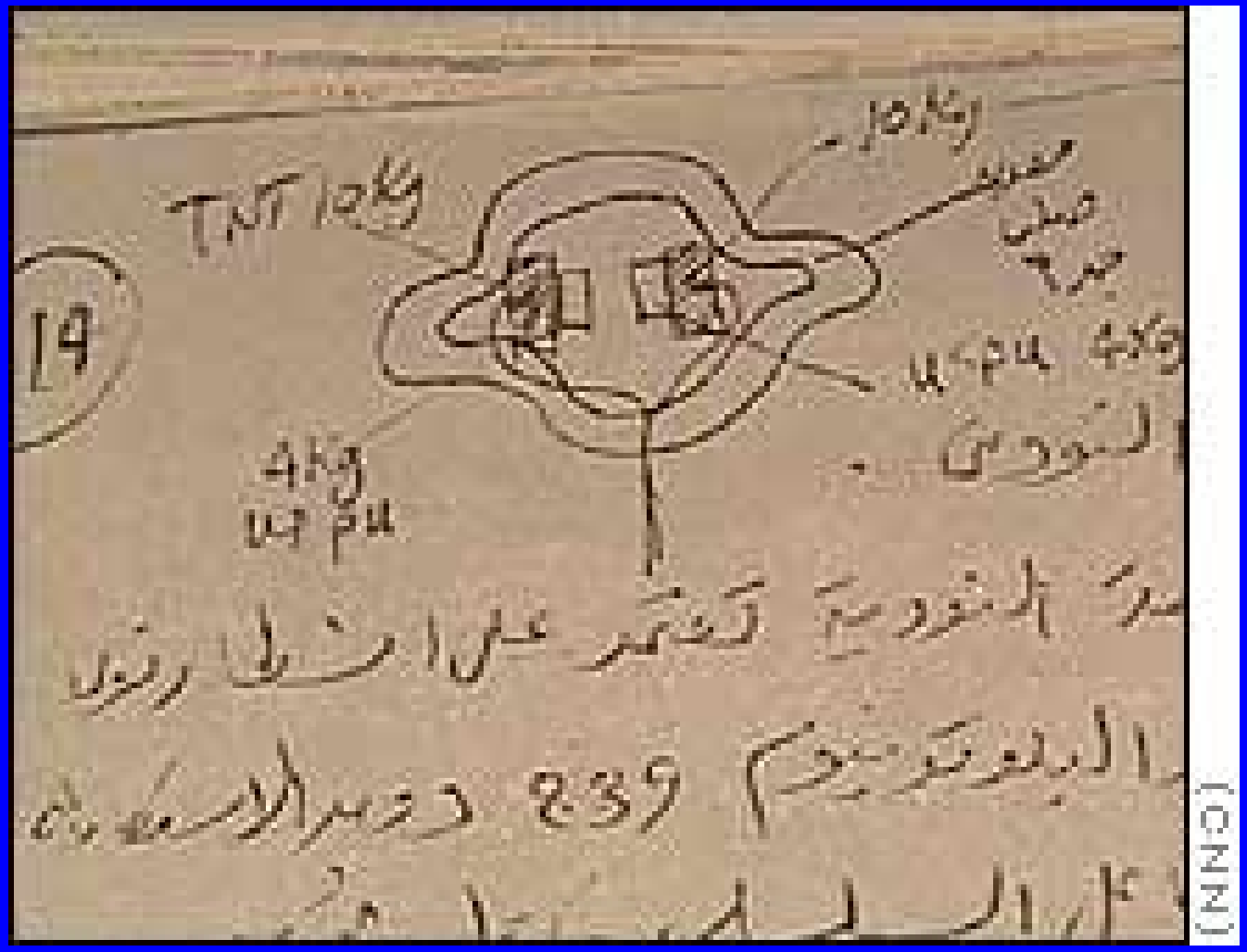

(CNN)

Securing nuclear stockpiles -- a global problem

- Thousands of tons of weapons-usable nuclear material exist in hundreds of buildings in more than 40 countries worldwide
- Security ranges from excellent to appalling -- no binding global standards in place
- >130 operational research reactors fueled with HEU in ~ 40 countries -- most with modest security
- Russia has world's largest stocks, still in transition from Soviet security system not designed for open society with open borders -- rest of FSU has little experience, few resources, for guarding nuclear materials
- Issues around the world: e.g., Pakistan (high security but very high threat -- outsider and insider)

Improvements still needed within Russia

- Many sites with broken intrusion detectors, ineffective seals, equipment that is not maintained
- Pervasive problems with security culture, implementation of effective security procedures: “Good security is 20% equipment, 80% culture.” (U.S. Gen. Gene Habiger)
- At each new building where work begins, U.S. and Russian experts readily agree on need for wide range of security and accounting improvements
- Cooperative security and accounting upgrades completed for only 22% of material – need sea-change in speed of progress, solution of access issue

Nuclear terrorism threat to Russia

- Russian officials confirm 4 incidents of terrorist reconnaissance on nuclear warheads in 2001-2002 – 2 at storage sites, 2 on transport trains
- 41 terrorists who seized Moscow theater in 2002 reportedly considered seizing facilities at Kurchatov Institute
- Russian businessman arrested offering $750,000 for stolen weapon-grade plutonium for sale to a foreign client
- How many facilities in Russia (or worldwide) could reliably defeat 41 armed, suicidal terrorists, without warning?
- Are we confident that no one in a position to steal HEU or Pu would be tempted by $750,000?

Summary: the nuclear terrorist threat

	Yes	No
Do terrorists want nuclear weapons?	☑	☐
– Clear Bin Laden statements, some Chechen interest		
Is it conceivable terrorists could make a crude bomb if they got the material?	☑	☐
Is there material that might be vulnerable to theft and transfer to terrorists?	☑	☐
Is it likely that terrorists, if they had a crude device, could smuggle it to Moscow, Washington, or New York?	☑	☐

Security impact on the nuclear industry

- If terrorists got nuclear bomb material from a theft anywhere in the world, it would be a political disaster for the nuclear industry on a scale not seen since Chernobyl
  - particularly devastating for those parts of industry using weapons-usable material (e.g., reprocessing and plutonium recycle)
  - public reaction would be intense
  - as with Chernobyl, saying “that couldn’t happen here, we do things differently” would not solve the problem
- In their own long-term self-interest, industry representatives should be lobbying hard for programs to ensure all nuclear material is secure and accounted for
- Possibility of industry self-help group, to share best practices, peer review -- “World Association for Nuclear Security,” on model of WANO

Priority 1:
Cleaning out small, vulnerable stocks

- >130 operating HEU research reactors in >40 countries
- Most have only small amounts of material -- a few have enough HEU for a bomb (but number increases if threat posed by “irradiated” HEU cool enough to be usable by suicidal terrorists is considered)
- Many do not have resources for effective safeguards and security, or to continue to do effective research
- Need focused program to provide comprehensive packages of incentives to facilities to give up their HEU -- purchase of HEU, assistance with conversion to LEU, shutdown help, help with other research, etc.
- Goal: eliminate HEU from most vulnerable sites w/in 4 years; eliminate HEU from *all* civilian sites w/in 10 years

Small, vulnerable stocks (cont.)

- Initiative needs to include both fresh and irradiated HEU – irradiated material still HEU, fuel elements small and easy to carry away, most not radioactive enough to deter theft
- U.S. should create single task force with needed resources, authority, expertise in single set of hands – broad flexibility to negotiate incentives
- Russia should place higher priority on HEU removals – solve internal bureaucratic problems, get environmental assessment done!
- Russia and U.S. should give facilities *within* Russia strong incentives to give up their HEU
- G8 should launch "SMART" initiative – "Strategic Materials Accelerated Removal and Transport"

Gaps in current HEU removal efforts

- U.S. HEU take-back – 2/3 of 17 tons of U.S.-supplied HEU not even covered, so few incentives for facilities to send their HEU that only 1/2 of material covered expected to be sent back (DOE now modifying program)
- Russian HEU take-back – recent successful removals from Yugoslavia, Romania, Bulgaria, Libya – but take-back of irradiated HEU tied up in bureaucratic obstacles to completing required environmental assessment
- Reactor conversion – new fuels may allow most reactors to convert to LEU, but fast reactors, pressurized reactors, specialty fuel reactors, non-U.S. non-Soviet reactors, ice-breaker reactors, tritium reactors, etc. not covered – plan would convert 60 out of 135 HEU reactors by 2012
- Russian reactors – no incentive to convert, no plan to do so

Priority 2: Blending large stocks of HEU to non-weapons-usable form

- Existing HEU Purchase Agreement destroying 30 tons of HEU per year, providing hundreds of millions of dollars each year to Russian nuclear complex – chief source of funds for nuclear cities conversion, cleanup, sub dismantlement – provides ½ U.S. nuclear electricity
- Existing Russian blending facilities could probably double blending rate with only small investments in additional equipment, plus increased operating costs
- Hence, possibility of accelerated HEU blend-down initiative – for example, U.S. could pay Russia a fee to blend HEU and store resulting LEU until market is ready to absorb it, then Russia could sell LEU on commercial market, get full commercial value

Blending large stocks (cont.)

- Many possible variations -- who pays; what kind of payment (e.g., grant, pre-payment on future deliveries); where blended; to what level blended; what arrangement for eventual sale; where blended material stored; etc.
- U.S. interests: achieve nonproliferation and arms reduction objectives as rapidly as possible, at minimum cost
- Russian interests: maintain large and stable revenue stream; maintain large numbers of jobs; maintain sufficient HEU for military needs; avoid political fight; reduce costs of storing and guarding HEU; nonproliferation
- Russia knows USG intervention to keep HEU deal going is based on proliferation concern -- LEU could erase that
- Need approach that clearly serves both U.S. and Russian interests

Motivation for accelerated blend-down

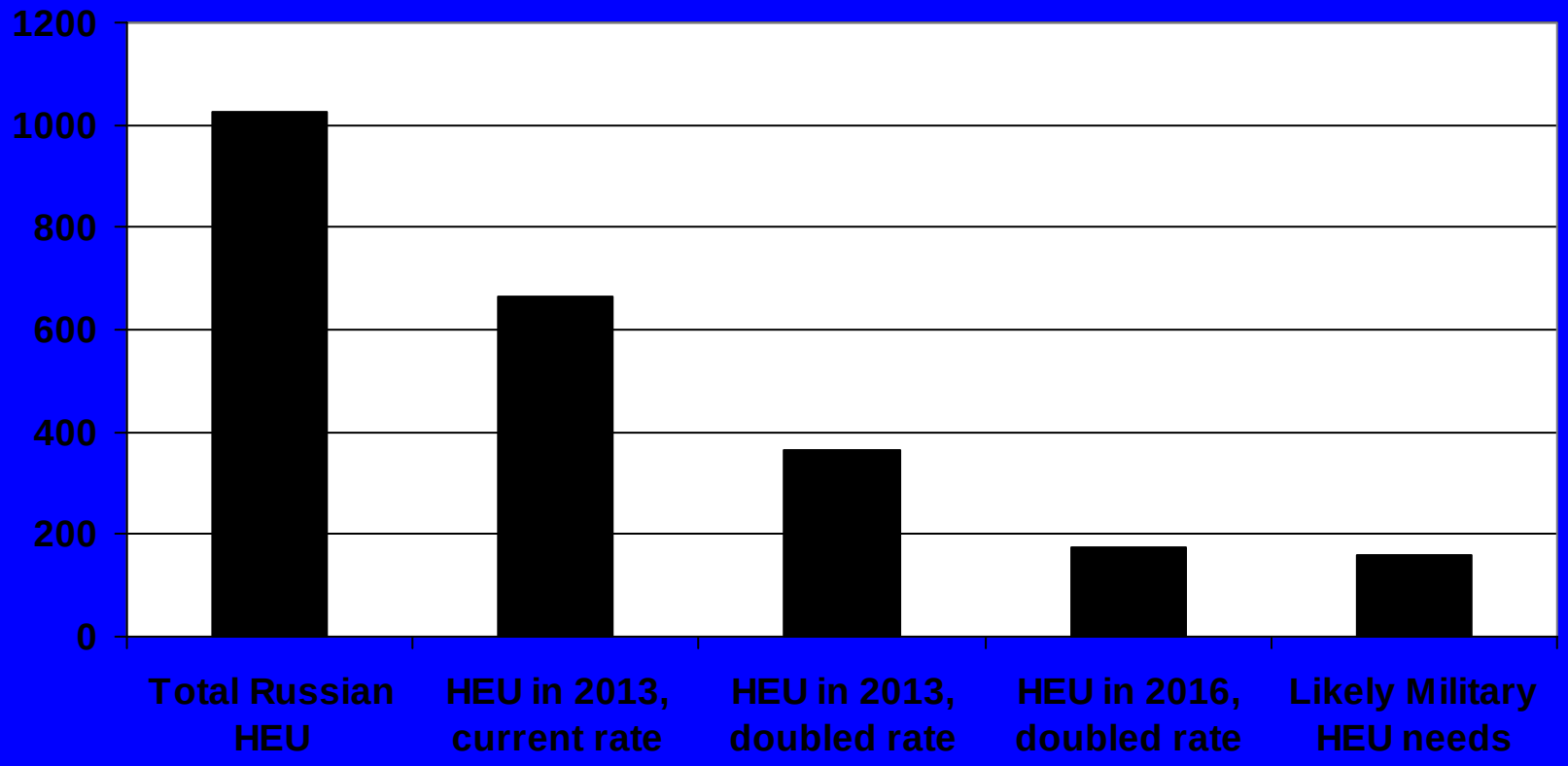

One Possible Option: Rapid Blend to 19%, Final Blend and Sale Later

- Blending and sale of 30 t HEU/yr for existing HEU deal continues as currently -- with measures to stabilize
- USG pays Russia its costs to blend additional 30 t/yr to 19% (possibly as prepayment against future deliveries)
- U.S.-Russian agreement that this extra material will *not* be released on market while current deal continues
- U.S.-Russian agreement that Russian market access for LEU from 30 t/yr HEU will continue after 2013 -- extra material sold then
- U.S. gets more vulnerable HEU destroyed; Russia gets money for more jobs in the near term, extension of big revenue stream in the long term

When will the market be ready for more LEU from HEU?

- International nuclear industry now assumes 30 t/yr flow will continue after 2013 – may be shortages if not
- Increasing concerns that U supply from mines and secondary sources may not be sufficient to meet demand by ~2008-2009 – if gap becomes serious, could create opportunity for additional sales before 2013
- Need to balance U and SWU markets – existing enrichers will defend their market shares, and have gov't backing
- Certainly market will want material by 2013 – maybe some of it a few years before
- Possible long-term approach: reactor sales coupled with lifetime guarantee of LEU fuel from HEU – could combine nuclear expansion and disarmament

Recommendations

- United States and Russia should drastically accelerate joint efforts to secure and account for *all* nuclear weapons, weapons-usable nuclear material -- and lead global campaign to secure such material everywhere
- A fast-paced program with broad authority should be put in place with the mission of removing HEU from the world's most vulnerable sites as rapidly as possible
- U.S. and Russian governments should negotiate arrangements to "blend and store" more HEU, which serve both sides' interests and do not unduly disturb the market
- Industry should help governments understand how to structure deals that would not damage the market -- and should press hard for government action to prevent nuclear security incidents that would be disastrous for industry

For further reading…

- *Controlling Nuclear Warheads and Materials*
  - http://www.nti.org/cnwm
- *Letter Report from the Co-Chairs of the Joint Committee on U.S.-Russian Cooperation on Nuclear Non-Proliferation,* John P. Holdren and Nikolai P. Laverov
  - http://www4.nationalacademies.org/news.nsf/isbn/s02052003?OpenDocument