Next steps to strengthen nuclear security and prevent nuclear terrorism

Matthew Bunn
Harvard Kennedy School

"Next Generation Nuclear Security: Measuring Progress and Charting the Way Forward"

Vienna, Austria, 13 April 2011

http://www.managingtheatom.org

Nuclear terrorism remains a real danger

- Some terrorists are seeking nuclear weapons and materials
- Some terrorists could plausibly make a crude nuclear bomb if they got needed nuclear material
- ~ 20 real cases of theft or smuggling of HEU or plutonium (most recent March 2010)
  - Inadequate security measures to defeat demonstrated threats in many countries
- Devastating consequences – would reverberate worldwide
  - Even small probability is enough to motivate action

Source: Block/AP

Nuclear safety and security: Strengthening the regime after Fukushima

- Fukushima tragedy offers lessons for both safety and security
  - Took extraordinary natural disaster to take out both normal and emergency cooling
  - For terrorists, this may be part of the plan – changes probabilities
  - Odds of next major radioactive disaster coming purely by accident may be lower than odds of it happening from hostile action
  - All nations should request independent, international review of both safety and security

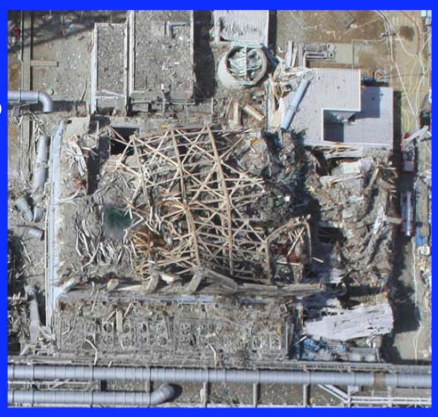

Source: Air Photo Service, Japan

You can't be safe without being secure – and you can't be secure without being safe.

With nuclear material, terrorists may be able to make crude nuclear bombs

- With HEU, gun-type bomb – as obliterated Hiroshima – very plausibly within capabilities of sophisticated terrorist group
- Implosion bomb (required for Pu) more difficult, still conceivable (especially if they got help)
  - Doesn't need to be as complex as Nagasaki bomb

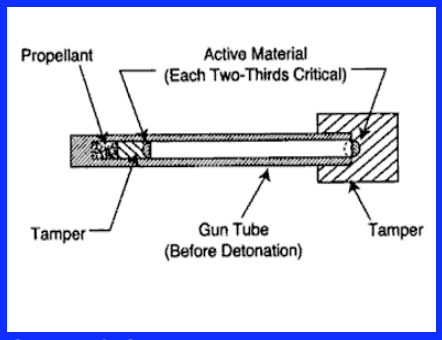

Source: NATO

Immense difference between difficulty of making safe, reliable weapons for use in a missile or combat aircraft and making crude, unsafe, unreliable weapons for delivery by truck

Terrorists are seeking nuclear weapons

- al Qaeda has repeatedly sought to get nuclear bomb materials, recruit nuclear expertise
- Focused nuclear program reported directly to Zawahiri
  - Carried out crude explosive tests in the Afghan desert – implosion-related
  - Got *fatwa* authorizing use of nuclear weapons in 2003 – Zawahiri elaborated on argument in 2008
- Chechen teams scoped Russian nuclear weapon sites in 2001
- Japanese terror cult Aum Shinrikyo sought nuclear weapons in 1990s

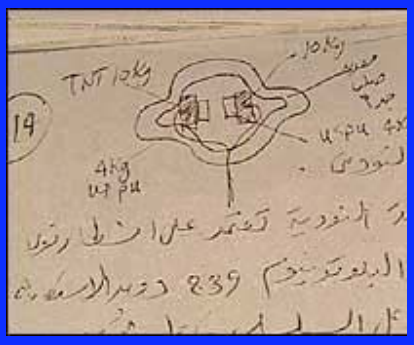

Source: CNN

Terrorists have considered nuclear sabotage

- al Qaeda senior leadership has explored the possibility of sabotaging nuclear facilities
- Chechen terrorists have threatened and planned attacks on nuclear facilities
- Terrorists who seized a Moscow theater in 2002 considered seizing a reactor at the Kurchatov Institute instead

Source: Air Photo Service, Japan

Nuclear material is not hard to smuggle – plutonium box for first-ever bomb

Source: Los Alamos

Major nuclear security progress – but more to be done

- Dozens of sites with dramatically improved security
- Dozens of sites with all potential nuclear bomb material removed
- Nearly all planned comprehensive upgrades in Russia and former Soviet Union completed
- But many weaknesses remain, in many countries
  - Protection against only modest threats
  - Lack of on-site armed guards
  - Limited insider protection

Source: Department of Defense

What is the evidence that current nuclear security is inadequate?

- Continuing seizures of weapons-usable material
  - ~20 real cases involving HEU or Pu since 1992
  - Most recent case: HEU in Georgia, March 2010
  - But material in recent seizures *could* have been stolen long ago
- "Red team" tests indicate security systems can be defeated by intelligent adversaries looking for weak points
  - Repeated cases in U.S. tests – though U.S. has more stringent security requirements than virtually any other country
  - Most other countries don't carry out such tests
- Successful thefts and attacks at well-secured non-nuclear facilities – demonstrating adversary capabilities
  - Repeated cases of use of insiders, covert outsider attacks, unusual tactics, succeeding in stealing from/attacking heavily guarded sites
  - Existing nuclear security measures in many countries demonstrably insufficient to protect against such adversary capabilities

Seizing the opportunities from the nuclear security summit

- Summit raised the issue to presidents and prime ministers in an unprecedented way
  - Major contribution to building the sense of urgency and commitment around the world
  - Agreement on securing all vulnerable material within four years
  - Many significant commitments (e.g., Ukraine's commitment to eliminate all HEU by the end of 2012)
  - Agreement to hold another summit in 2012, regular meetings between, helps hold countries' feet to the fire
- Challenge now is moving from words to deeds
  - Need intensive diplomacy to convince countries to toughen security rules, convert research reactors, eliminate stocks where possible
  - Unfortunate funding constraint: FY2010 < FY2009, FY2011 on continuing resolution
  - Huge obstacles: complacency, sovereignty, secrecy, bureaucracy, politics between states…

Learning from Fukushima

- Major innovations result from crises
  - Three Mile Island => Institute of Nuclear Power Operations
  - Chernobyl => Nuclear Safety Convention, WANO, OSART...
  - What steps will the world take after Fukushima?
- Need steps to strengthen barriers against both paths to nuclear disasters:
  - Accidents
  - Terrorism
- World is much less prepared for security incidents than for safety incidents
  - Many reactors have no armed guards, otherwise weak security
  - Nuclear security regime far weaker than safety regime
- Need new standards, broader international reviews
  - Restoring public confidence central to future of nuclear energy

What would success look like?

- Number of sites with nuclear weapons, HEU, or separated plutonium greatly reduced
- All countries with HEU, Pu, or major nuclear facilities put in place *at least* a "baseline" level of nuclear security
  - Protection against a well-placed insider, a modest group of well-trained and well-armed outsiders (able to operate as more than one team), or both outsiders and an insider together
  - Countries facing higher adversary threats put higher levels of security in place
- Strong security cultures in place, focused on continual improvement, search for sustainable excellence
- Measures in place to confirm strong security performance
  - Effective regulation, inspection, enforcement
  - Regular, realistic performance tests – including "red teams"
  - Independent, international review – becoming the norm

Belief in the threat – the key to success

- Effective and lasting nuclear security worldwide will not be achieved unless key policymakers and nuclear managers around the world come to believe nuclear terrorism is a real threat to *their* countries' security, worthy of investing their time and resources to address it
- Steps to convince states this is a real and urgent threat:
  - Intelligence-agency discussions – most states rely on their intelligence agencies to assess key security threats
  - Joint threat briefings – by their experts and our experts, together
  - Nuclear terrorism exercises and simulations
  - "Red team" tests of nuclear security effectiveness
  - Fast-paced nuclear security reviews – by teams trusted by the leadership of each country
  - Shared databases of real incidents related to nuclear security, capabilities and tactics thieves and terrorists have used, lessons learned

Security culture matters: Propped-open security door

Source: GAO, Nuclear Nonproliferation: Security of Russia's Nuclear Material Improving, More Enhancements Needed *(GAO, 2001)*

For further reading…

- Full text of Managing the Atom publications at:
  - http://www.managingtheatom.org
- *Securing the Bomb 2010:*
  - http://www.nti.org/securingthebomb
- *For regular e-mail updates from Managing the Atom, write to* atom@harvard.edu

Backup slides if needed…

3 types of nuclear terrorism

- ***Nuclear explosives***
  - Incredibly catastrophic
  - Difficult for terrorists to accomplish (though not as implausible as some believe)
- ***Nuclear sabotage***
  - Very catastrophic *if* highly successful (very limited if not)
  - Also difficult to accomplish
- ***"Dirty Bomb"***
  - "Weapons of mass disruption" – potentially $10s billions of disruption, cleanup costs
  - Far easier to accomplish

Talk will focus on nuclear explosives – likely highest overall risk (multiplying probability times consequences)

What can be done in the four-year effort – and beyond

- By end of 2013 (ambitious targets)
  - Drastically reduce number of <u>countries</u> with weapons-usable nuclear material on their soil
    - » ~50% reduction may be possible
  - Reduce number of <u>locations</u> where weapons-usable nuclear material exists (~20-30% reduction may be possible)
  - Ensure all HEU and Pu worldwide has at least a "baseline" level of protection – e.g., secure against modest group of well-armed, well-trained outsiders (>1 team), and/or one well-placed insider
  - Ensure beyond-baseline security in a few countries with especially large threats (e.g., Pakistan)
  - Get countries to launch programs to strengthen security culture
- After end of 2013:
  - Forge common understanding on effective global nuclear security standards (e.g., as interpretation of UNSC 1540 obligation)
  - Phase-out of civilian HEU, end accumulation of separated Pu

Blocking the terrorist pathway to the bomb

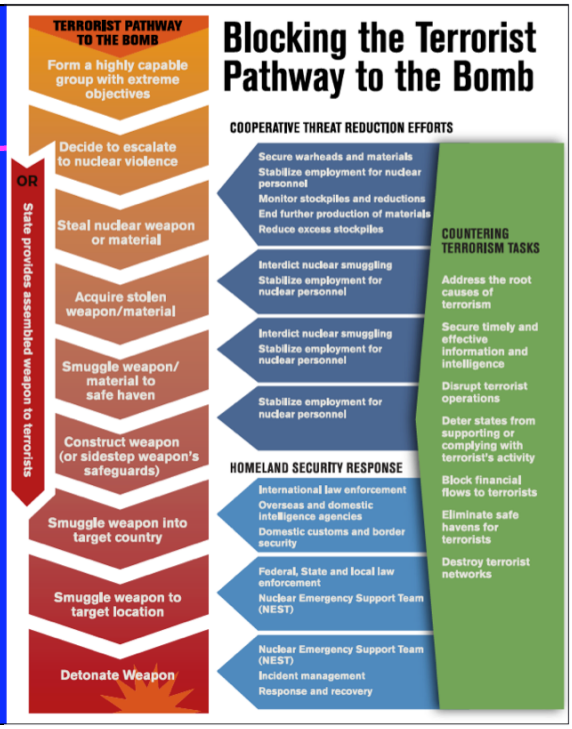

Source: Bunn, Securing the Bomb 2010: Securing All Nuclear Materials in Four Years (2010)

Cooperative threat reduction is a tiny portion of overall spending

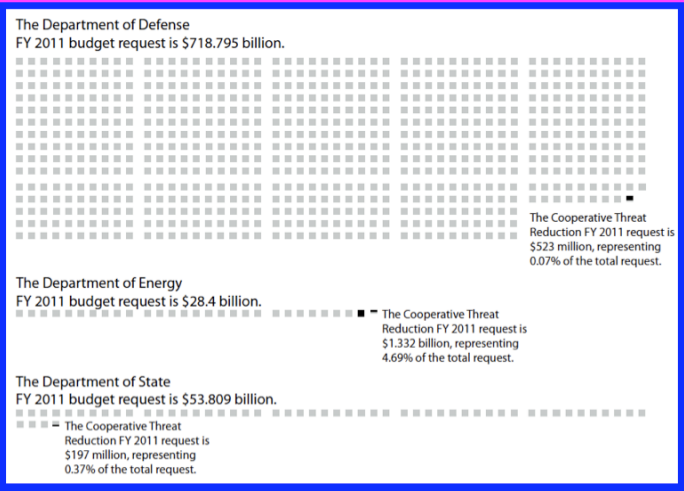

Source: Author's estimates, described in Securing the Bomb 2010

North Korea and Iran are likely small parts of the nuclear terrorism problem

- Nuclear security:
  - North Korea has only a few bombs' worth of plutonium in a tightly controlled garrison state – theft very unlikely
  - Iran has not begun to produce weapons-usable material – has only a small amount of HEU research reactor fuel
- Conscious state transfer:
  - Regimes bent on maintaining power unlikely to take the immense risk of providing nuclear bomb material to terrorist groups who might use it in a way that would provoke overwhelming retaliation
  - Transfers to other *states* – who are likely to be deterred from using nuclear weapons – a very different act
- High-level "rogues" within states
  - If stocks of weapons-usable material grew, could an "A.Q. Kim" sell without detection?
- State collapse:
  - Could have worrisome "loose nukes" scenario

Spread of nuclear power <u>need not</u> increase terrorist nuclear bomb risks

- Most nuclear reactors do not use nuclear material that can readily be used in nuclear bombs:
  - Low-enriched uranium fuel cannot be used to make a nuclear bomb without technologically demanding further enrichment
  - Plutonium in spent fuel is 1% by weight in massive, intensely radioactive fuel assemblies
- Reprocessing (separating plutonium from spent fuel) could increase risks, requires intensive security and accounting
  - Poor economics, few additional countries pursuing – South Korea and China major current issues
  - Reprocessing does <u>not</u> solve the nuclear waste problem – should not be seen as the "answer" to the U.S. Yucca Mountain problem
- Power reactors <u>do</u> pose potential targets for sabotage
  - Sabotage would mainly affect countries in region, global nuclear industry
  - As with nuclear theft, strong security measures can reduce the risk

The international nuclear security framework is insufficient

- Binding agreements
  - 1980 Physical Protection Convention and 2005 Amendment
    - » Parties must have a rule on nuclear security – but what should it say?
    - » 2005 Amendment not likely to enter into force for years to come
  - 2005 Nuclear Terrorism Convention
    - » All parties to take "appropriate" nuclear security measures -- unspecified
  - UNSC Resolution 1540
    - » All states must provide "appropriate effective" nuclear security -- unspecified
- International recommendations
  - IAEA "Nuclear Security Series," especially INFCIRC/225
    - » More specific, but still quite general – should have a fence with intrusion detectors, but how hard should they be to defeat?
    - » Compliance voluntary (though most countries do)
- Technical cooperation and funding
  - Nunn-Lugar, comparable programs
  - Global Partnership
    - » But no agreement yet on 10-year, $10B extension

The international nuclear security framework is insufficient (II)

- Cooperative frameworks
  - Global Initiative to Combat Nuclear Terrorism
    - » 82 nations participating
    - » Helps to convince countries of reality of threat
    - » Sharing of experience, best practices, capacity-building
    - » Modest focus on upgrading nuclear security
  - Proliferation Security Initiative
    - » Unlikely to stop smuggling of suitcase-sized items
  - Nuclear Security Summit
    - » Brought together leaders from 47 countries
    - » Commitment to secure all vulnerable nuclear material in four years
- The IAEA role
  - Developing recommendations, peer reviews, assistance, data
    - » All voluntary, largely limited to non-nuclear-weapon states

Many tiles in the mosaic – but is it yet a beautiful picture? No common baseline of nuclear security for all Pu and HEU

Did you know? Real incidents related to nuclear terrorism

- Events that have genuinely occurred:
  - A large-scale terrorist attack on a U.S. nuclear weapons base
  - Terrorist teams carrying out reconnaissance at Russian nuclear weapons storage facilities
  - An attack on the Pelindaba site in S. Africa (100s of kgs of HEU) by two armed teams
    - » One team penetrated 10,000-volt security fence, disabled intrusion detectors, went to emergency control center, shot worker there
    - » 45 minutes inside guarded perimeter, never engaged by site security forces
  - A terrorist attack on a nuclear facility (not yet operational) in which armed guard force was overwhelmed, terrorists were in control of facility for an extended period
  - More than a dozen real acts of sabotage at nuclear facilities
    - » None apparently intended to cause large radioactive release
    - » One involved firing a rocket-propelled grenade at a nuclear facility
  - Russian businessman offering $750,000 for stolen weapon-grade plutonium, for sale to a foreign client

Did you know? Real incidents related to nuclear terrorism (II)

- Events that have genuinely occurred:
  - Preliminary explosive tests in al Qaeda's nuclear program
  - Repeated al Qaeda efforts to get stolen nuclear material or nuclear weapons (most recently in 2003)
  - Repeated al Qaeda attempts to recruit nuclear expertise
    - » Including bin Laden and Zawahiri meeting with senior Pakistani scientists
  - al Qaeda seeking and receiving religious ruling authorizing nuclear attack on American civilians (2003)
  - Several incidents of al Qaeda considering (but not pursuing) attacks on nuclear power plants
- Good news on nuclear terrorism (*as far as we know*):
  - No convincing evidence terrorists have yet succeeded in getting either materials or expertise needed
  - Risk has likely declined, because of improved nuclear security, large disruptions to "al Qaeda central"
  - Both al Qaeda and Aum Shinrikyo found nuclear to be difficult

Hiroshima -- result of a gun-type bomb

Source: U.S. Army

What should the mission be?

- Achieve effective and lasting security for all nuclear weapons and stocks of plutonium and HEU worldwide within four years – while consolidating to the minimum number of locations
  - Effective = provides high-confidence protection against demonstrated terrorist and criminal capabilities
    - » Not only installed systems but effective security culture
  - Lasting = countries can and will sustain effective security with their own resources (and have effectively enforced regulations in place that require the necessary measures to be maintained)
  - All = not just in Russia and the former Soviet Union, not just in developing countries, but in all countries – global problem, and wealthy developed countries also an issue
  - Consolidating = reducing number of weapons and materials sites wherever possible, especially removing material from the most vulnerable, difficult-to-defend sites (such as civilian research reactors)

Some highlights of the FY2011 nuclear security request

- GTRI:
  - $559 million (+$225M, 67% boost from last year)
  - Will fund accelerated HEU removals, reactor conversions, some additional security upgrades at HEU-fueled reactors and for radiological sources
- CTR:
  - New $74.5M line for "Global Nuclear Lockdown"
  - Will fund regional nuclear security "centers of excellence", dealing with irradiated HEU naval fuel in Russia, some sustainability in Russia
- MPC&A:
  - +$25M for expanded upgrades in Russia, non-FSU countries

At least these amounts – and probably more – will be needed to have any hope of achieving the four-year goal

Goal/Program		FY09 Approp.	FY10 Approp.	FY11 Request	Change from FY10 Approp.	
Total, Improving Controls on Nuclear Weapons, Material, and Expertise		**1,315**	**1,290**	**1,684**	**394***	**31%**
Securing Nuclear Warheads and Materials		**756**	**707**	**1,018**	**+311**	**+44%**
Material Protection, Control, & Accounting (excl. SLD) [1]	Energy	280	300	325	+25	+8%
Nuclear Weapons Storage Security - Russia	Defense	16	22	10	-12	-56%
Global Threat Reduction Initiative	Energy	395	334	559	+225	+68%
Nuclear Weapons Transportation Security - Russia	Defense	59	46	45	-1	-2%
International Nuclear Security	Energy	6	6	5	0	-7%
Global Nuclear Lockdown	Defense	0	0	74	+74	NP**
Interdicting Nuclear Smuggling		**300**	**425**	**421**	**-4**	**-1%**
Second Line of Defense (part of MPC&A budget line)	Energy	175	272	265	-7	-3%
Export Control and Related Border Security Assistance	State	46	54	62	+8	+14%
WMD Proliferation Prevention	Defense	69	84	80	-4	-5%
International Counterproliferation [2]	Defense	10	14	14	0	0%
Stabilizing Employment for Nuclear Personnel		**81**	**94**	**94**	**0**	**0%**
Global Threat Reduction Program	State	62	70	72	+2	+3%
Global Initiatives for Proliferation Prevention	Energy	15	20	18	-1	-7%
Civilian Research and Development Foundation [3]	State	4	4	4	0	0%
Monitoring Stockpiles and Reductions		**33**	**36**	**34**	**-1**	**-4%**
HEU Transparency Implementation	Energy	17	18	18	0	0%
Warhead and Fissile Material Transparency	Energy	16	18	17	-1	-7%
Ending Further Production		**141**	**25**	**0**	**-25**	**-100%**
Elimination of Weapons Grade Plutonium Production	Energy	141	25	0	-25	-100%
Reducing Excess Stockpiles		**1**	**1**	**113**	**+112**	**11,200%**
Russian Plutonium Disposition	Energy	1	1	113	+112	11,200%
Cross-Cutting Initiatives		**3**	**3**	**3**	**0**	**0%**
WMD Terrorism	State	2	2	2	0	0%
Coordinator for Threat Reduction	State	1	1	1	0	0%

Required budgets depend on strategy – but substantial funds will be needed

- Different approaches involve different U.S. costs
  - U.S.-funded security upgrades worldwide would be expensive
  - But for many countries, approach will be convincing them to upgrade nuclear security themselves
- *But*, to do more, faster, will cost more money
  - Paying for more reactor conversions
  - Paying for more HEU and plutonium removals
  - Paying for upgrading sites to higher standards of security
  - Paying for upgrading more sites
  - Offering incentives to convince sites to convert/shut down/give up their HEU
  - Expanding cooperation on regulations, sustainability, security culture to more countries

"Steady as you go" budgets will not be enough

- FY2010 request prepared before four-year nuclear security plan could be fleshed out – clearly insufficient
- Achieving the four-year goal will require increased effort:
  - Security upgrades at more sites in more countries
  - Expanded efforts to strengthen security regulation, security culture
  - Removing a wider range of materials from a wider range of facilities
  - *Incentives* to convince states and operators to give up their material
  - Expansion to shut-down of underutilized research reactors as a complement to current focus on conversion
- *But*, the United States should not be paying for upgrades everywhere – in countries like Japan or Belgium, the focus must be on convincing them to upgrade security themselves

Providing the resources needed

- Nuclear security is affordable: large reduction in nuclear terrorism risk can be purchased for ~1-2% of one year's defense budget, spread over several years
- Congress should ask the administration for an assessment of total funds required, by year, to meet the four-year goal – then increase current budget request to match
- Because unexpected opportunities arise, difficult-to-plan incentives are often required, Congress should provide flexible pool of ~$500 million to be drawn on as needed

Given the high stakes and modest costs, Congress and the administration must act to ensure that this effort is not slowed by lack of money

Other key areas for resources

- Helping states implement effective controls required by UNSC 1540
  - Expanded programs to strengthen criminal laws, upgrade export controls, border controls, transshipment controls in many countries
- Modify mandate for 100% scanning of containers into systems-level approach – with "red teaming" to probe vulnerabilities – to make it as difficult as we cost-effectively can to get nuclear weapons and materials into United States by *any* routes
- Intelligence support – particularly understanding security arrangements, insider and outsider threats, for nuclear stockpiles around the world
- Fund non-government analysis – small investments can lead to large returns in improved program effectiveness

The challenge

- Lugar Doctrine: war on terrorism will not be won until every nuclear bomb and cache of bomb material everywhere in the world is secure and accounted for to stringent and demonstrable standards

On the day after a nuclear terrorist attack, what would we wish we had done to prevent it?

Why aren't we doing it now?